Series 3700A System Switch/Multimeter and Plug-In Cards

Datasheet

The Series 3700A offers scalable, instrument grade switching and multi-channel measurement solutions that are optimized for automated testing of electronic products and components. The Series 3700A includes four versions of the 3706A system switch mainframe along with a growing family of plug-in switch and control cards. When the 3706A mainframe is ordered with the high performance multimeter, you receive a tightly integrated switch and measurement system that can meet the demanding application requirements in a functional test system or provide the flexibility needed in stand-alone data acquisition and measurement applications.

Key Features

- Six-slot system switch mainframe with optional high performance multimeter
- Multi-processor architecture optimized for high throughput scanning and pattern switching applications
- Remote PC control via Ethernet, USB, and GPIB interfaces
- Up to 576 two-wire or 720 one-wire multiplexer channels in one mainframe
- Up to 2,688 one-pole matrix crosspoints in one mainframe
- Embedded Test Script Processor (TSP®) offering unparalleled system automation, throughput, and flexibility
- TSP-Link Technology master/slave connection provides easy system expansion and seamless connection to Series 2600 and 2600B SourceMeter® SMU instruments
- Capable of over 14,000 readings per second to memory with optional high performance multimeter
- LXI interface with embedded Web browser interface for test setup, maintenance, and basic application control

Maximizes System Control and Flexibility

To provide users with greater versatility when designing test systems, the Series 3700A mainframes are equipped with many standard features. For example, easy connectivity is supported with three remote interfaces: LXI/Ethernet, General Purpose Interface Bus (GPIB), and Universal Serial Bus (USB). Fourteen digital I/O lines are also included, which are programmable and can be used to control external devices such as component handlers or other instruments. Additionally, system control can be greatly enhanced by using our Test Script Processor (TSP) technology. This technology provides “smart” instruments with the ability to perform distributed processing and control at the instrument level versus a central PC.

Tektronix®

High Quality Switching at a Value Price

The Series 3700A builds upon Keithley's tradition of producing innovative, high quality, precise signal switching. This series offers a growing family of high density and general purpose plug-in cards that accommodates a broad range of signals at very competitive pricing. The Series 3700A supports applications as diverse as design validation, accelerated stress testing, data acquisition, and functional testing.

3706A Mainframe

The Series 3700A includes the base 3706A system switch/multimeter mainframe with three options for added flexibility. This mainframe contains six slots for plug-in cards in a compact 2U high (3.5 inches/89 mm) enclosure that easily accommodates the needs of medium to high channel count applications. When fully loaded, a mainframe can support up to 576 two-wire multiplexer channels or 2,688 one-pole matrix crosspoints for unrivaled density and economical per channel costs.

High Performance, 7½-digit Multimeter (DMM)

The high performance multimeter option provides up to 7½-digit measurements, offering 26-bit resolution to support your ever-increasing test accuracy requirements.

This flexible resolution supplies a DC reading rate from >14,000 readings/second at 3½ digits to 60 readings/second at 7½ digits to accommodate a greater span of applications. The multimeter does not use a card slot, so you maintain all six slots in your mainframe. In addition, the multimeter is wired to the mainframe's analog backplane, ensuring a high quality signal path from each card channel to the multimeter.

Single Channel Reading Rates		
NPLC	DCV/ 2 Wire Ohms	4 Wire Ohms
1.0	60	29
0.2	295	120
0.06	935	285
0.006	6,200	580
0.0005	14,100	650

The multimeter supports 13 built-in measurement functions, including: DCV, ACV, DCI, ACI, frequency, period, two-wire ohms, four-wire ohms, three-wire RTD temperature, four-wire RTD temperature, thermocouple temperature, thermistor temperature, and continuity. In addition, the multimeter offers extended low ohms (1 Ω) and low current (10 μA) ranges. In-rack calibration is supported, which reduces both maintenance and calibration time.

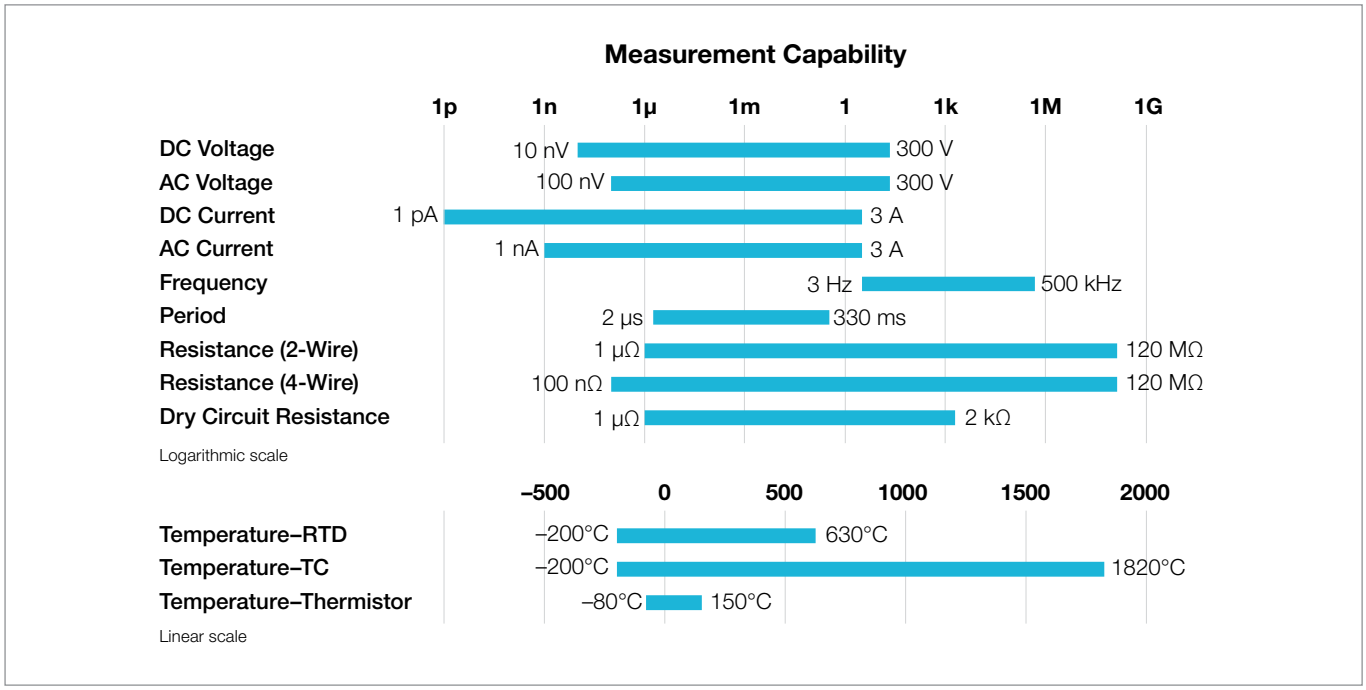

Measurement capabilities of the high performance multimeter

TSP Distributed Control Increases Test Speed and Lowers Test Cost

TSP technology enhances instrument control by allowing users the choice of using standard PC control or of creating embedded test scripts that are executed on microprocessors within the instrument. By using TSP test scripts instead of a PC for instrument control, you avoid communication delays between the PC controller and instrument, which results in improved test throughput. Test scripts can contain math and decision-making rules that further reduce the interaction between a host PC and the instrument.

This form of distributed control supports the autonomous operation of individual instruments or groups of instruments and can possibly remove the need for a high level PC controller, which lowers test and ownership costs. This is the same proven TSP technology found in our innovative Series 2600B System SourceMeter® SMU instruments.

TSP-Link Technology for Easy and Seamless System Coordination and Expansion

If your channel density requirements grow or if you need to process more signal types, use TSP-Link to expand your system. The TSP-Link master/slave connection offers easy system expansion between Series 3700A mainframes. You can also use TSP-Link to connect to other TSP-Link enabled instruments such as Series 2600B SourceMeter SMU instruments. Everything connected with TSP-Link can be controlled by the master unit, just as if they were all housed in the same chassis.

This high speed system expansion interface lets users avoid the complex and time-consuming task of expanding their remote interfaces to another mainframe. There is no need to add external triggers and remote communication cables to individual instruments, since all TSP-Link connected devices can be controlled from a single master unit.

Test Script Builder Software Suite

Test Script Builder is a software tool that is provided with all Series 3700A instruments to help users easily create, modify, debug, and store TSP test scripts. It supplies a project/file manager window to store and organize test scripts, a context-sensitive program editor to create and modify test TSP code, and an immediate instrument control window to send Ethernet, GPIB, and USB commands and to receive data from the instrument. The immediate window also allows users to see the output of a given test script and simplifies debugging.

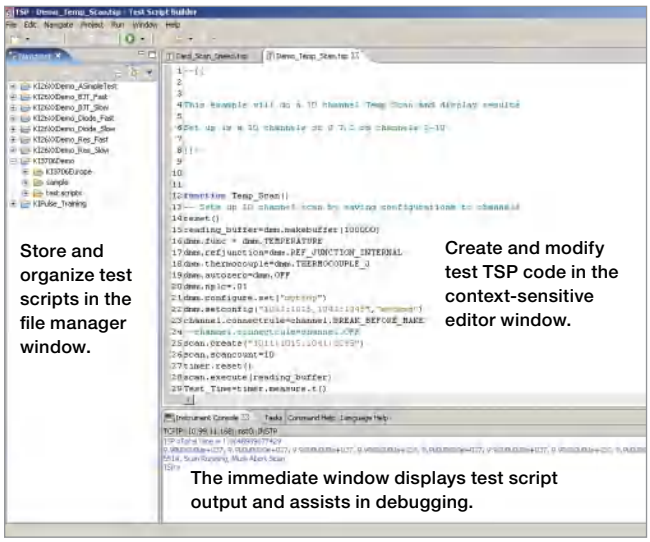

Test Script Builder Software Suite

LXI Version 1.4

LXI Core 2011 with LXI Clock Synchronization, LXI Timestamped Data, LXI Event Messaging, LXI Event Log.

Transportable Memory, USB 2.0 Device Port

All 3706A mainframes contain a USB device port for easy transfer of readings, configurations, and test scripts to memory sticks. This port, which is located on the front panel, provides you with easy access to and portability of measurement results. Simply plug in a memory stick and, with a few simple keystrokes, gain access to virtually unlimited memory storage. Additional capabilities include saving and recalling system configurations and storage for TSP scripts.

Embedded Web Server

The built-in Web interface offers a quick and easy method to control and analyze measurement results. Interactive schematics of each card in the mainframe support point-and-click control for opening and closing switches. A scan list builder is provided to guide users through the requirements of a scan list (such as trigger and looping definitions) for more advanced applications. When the mainframe is ordered with the multimeter, additional Web pages are included for measurement configuration and viewing, including a graphing toolkit.

Built-in Web Server Interface

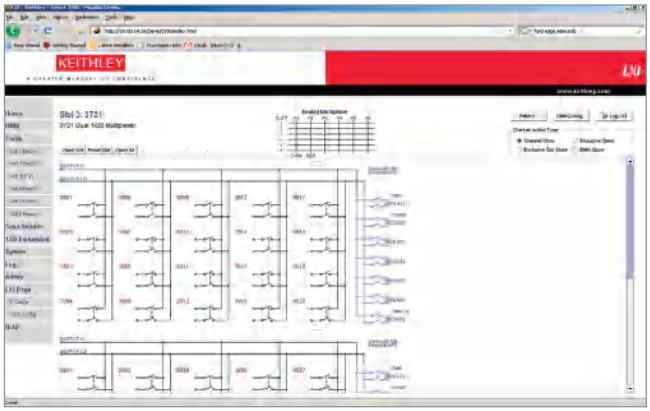

1. Configure your switch channels and measurement functions. Configure the DMM to make your measurements at the desired speed, resolution, etc. and assign them to the desired channels.

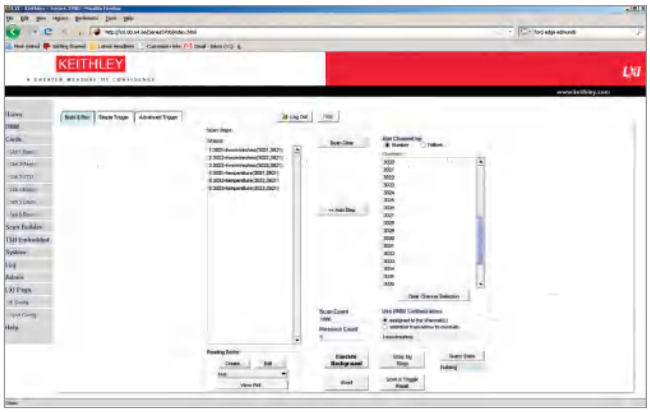

2. Build and run your automated scan list. The toolkit makes it easy to build and execute an automated sequence of channel-open and channel-close commands and triggered multimeter measurements.

3. Analyze your data. View your results in real-time or historical mode with point-and-click simplicity. Data can be exported directly to your PC in either numerical or graphical formats for presentation or other applications.

3706A front panel

3706A-S front panel

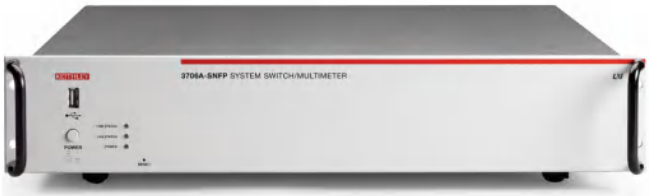

3706A-SNFP front panel

3706A rear panel

High Performance Multimeter Specifications (Rev. A)

DC Specifications

Conditions

1 PLC or 5 PLC.
For <1PLC, add appropriate "ppm of range" adder from "RMS Noise" table.
Includes rear panel Analog Backplane connector and transducer conversion. Refer to DC Notes for additional card uncertainties.

Function	Range[1]	Reso-lution	Test Current or Burden Voltage	Input Resistance or Open Circuit Voltage[2]	Accuracy ±(ppm of reading + ppm of range) (ppm = parts per million) (e.g., 10 ppm = 0.001%)			Temperature Coefficient 0°–18°C and 28°–50°C
					24 Hour[3] 23°C ± 1°C	90 Day 23°C ± 5°C	1 Year 23°C ± 5°C	
Voltage[4]	100.00000 mV[19]	0.01 µV		>10 GΩ or 10 MΩ ±1%	10 + 9	25 + 9	30 + 9	(1 + 5)/°C
	1.0000 000 V[19]	0.1 µV		>10 GΩ or 10 MΩ ±1%	7 + 2	25 + 2	30 + 2	(1 + 1)/°C
	10.000000 V	1 µV		>10 GΩ or 10 MΩ ±1%	7 + 2	20 + 2	25 + 2	(1 + 1)/°C
	100.00000 V	10 µV		10 MΩ ±1%	15 + 6	35 + 6	40 + 6	(5 + 1)/°C
	300.00000 V	100 µV		10 MΩ ±1%	20 + 6	35 + 6	40 + 6	(5 + 1)/°C
Resistance[4, 5, 6, 7]	1.0000000 Ω	0.1 µΩ	10 mA	8.2 V	15 + 80	40 + 80	60 + 80	(8 + 1)/°C
	10.000000 Ω	1 µΩ	10 mA	8.2 V	15 + 9	40 + 9	60 + 9	(8 + 1)/°C
	100.00000 Ω	10 µΩ	1 mA	13.9 V	15 + 9	45 + 9	65 + 9	(8 + 1)/°C
	1.0000000 kΩ	100 µΩ	1 mA	13.9 V	20 + 4	45 + 4	65 + 4	(8 + 1)/°C
	10.000000 kΩ	1 mΩ	100 µA	9.1 V	15 + 4	40 + 4	60 + 4	(8 + 1)/°C
	100.00000 kΩ	10 mΩ	10 µA	14.7 V	20 + 4	45 + 5	65 + 5	(8 + 1)/°C
	1.0000000 MΩ	100 mΩ	10 µA	14.7 V	25 + 4	50 + 5	70 + 5	(8 + 1)/°C
	10.000000 MΩ	1 Ω	0.64 µA//10 MΩ	6.4 V	150 + 6	200 + 10	400 + 10	(70 + 1)/°C
	100.00000 MΩ	10 Ω	0.64 µA//10 MΩ	6.4 V	800 + 30	2000 + 30	2000 + 30	(385 + 1)/°C
Dry Circuit Resistance[6, 8]	1.0000000 Ω	1 µΩ	10 mA	27 mV	25 + 80	50 + 80	70 + 80	(8 + 1)/°C
	10.000000 Ω	10 µΩ	1 mA	20 mV	25 + 80	50 + 80	70 + 80	(8 + 1)/°C
	100.00000 Ω	100 µΩ	100 µA	20 mV	25 + 80	90 + 80	140 + 80	(8 + 1)/°C
	1.0000000 kΩ	1 mΩ	10 µA	20 mV	25 + 80	180 + 80	400 + 80	(8 + 1)/°C
	2.0000000 kΩ	10 mΩ	5 µA	20 mV	25 + 80	320 + 80	800 + 80	(8 + 1)/°C
Continuity (2 W)	1.000 kΩ	100 mΩ	1 mA	13.9 V	40 + 100	100 + 100	100 + 100	(8 + 1)/°C
Current[9]	10.000000 µA	1 pA	<61 mV		40 + 50	300 + 50	500 + 50	(35 + 9)/°C
	100.00000 µA	10 pA	<105 mV		50 + 9	300 + 30	500 + 30	(50 + 5)/°C
	1.0000000 mA	100 pA	<130 mV		50 + 9	300 + 30	500 + 30	(50 + 5)/°C
	10.000000 mA	1 nA	<150 mV		50 + 9	300 + 30	500 + 30	(50 + 5)/°C
	100.00000 mA	10 nA	<0.4 V		50 + 9	300 + 30	500 + 30	(50 + 5)/°C
	1.0000000 A	100 nA	<0.6 V		200 + 60	500 + 60	800 + 60	(50 + 10)/°C
	3.0000000 A	1 µA	<1.8 V		1000 + 75	1200 + 75	1200 + 75	(50 + 10)/°C

Temperature

(Displayed in °C, °F, or K. Exclusive of probes errors.)

Thermocouples (Accuracy based on ITS-90)

Type	Range	Resolution	90 Day/1 Year, 23°C ± 5°C Simulated reference junction	90 Day/1 Year, 23°C ± 5°C Using 3720, 3721, or 3724 Cards	Range	90 Day/1 Year, 23°C ± 5°C Using 3720, 3721, or 3724 Cards	Temperature Coefficient 0°–18°C and 28°–50°C
J	–150 to + 760°C	0.001°C	0.2°C	1.0°C	–200 to –150°C	1.5°C	0.03°C/°C
K	–150 to +1372°C	0.001°C	0.2°C	1.0°C	–200 to –150°C	1.5°C	0.03°C/°C
N	–100 to +1300°C	0.001°C	0.2°C	1.0°C	–200 to –100°C	1.5°C	0.03°C/°C
T	–100 to +400°C	0.001°C	0.2°C	1.0°C	–200 to –100°C	1.5°C	0.03°C/°C
E	–150 to +1000°C	0.001°C	0.2°C	1.0°C	–200 to –150°C	1.5°C	0.03°C/°C
R	+400 to +1768°C	0.1°C	0.6°C	1.8°C	0 to +400°C	2.3°C	0.03°C/°C
S	+400 to +1768°C	0.1°C	0.6°C	1.8°C	0 to +400°C	2.3°C	0.03°C/°C
B	+1100 to +1820°C	0.1°C	0.6°C	1.8°C	+350 to +1100°C	2.8°C	0.03°C/°C
4-Wire RTD or 3-Wire RTD (100 Ω platinum [PT100], D100, F100, PT385, PT3916, or user 0 Ω to 10 kΩ) (Selectable Offset compensation On or Off) For 3-wire RTD, dmm.connect=dmm.CONNECT_FOUR_WIRE, ≤0.1 Ω lead resistance mismatching in Input HI and LO. Add 0.25°C/0.1 Ω of lead resistance mismatch.							
4-Wire RTD	–200 to +630°C	0.01°C	0.06°C				0.003°C/°C
3-Wire RTD	–200 to +630°C	0.01°C	0.75°C				0.003°C/°C
Thermistor 2.2 kΩ, 5 kΩ, and 10 kΩ. Not recommended with 3724 card. See 3724 manual for “Measurement Considerations.”							
	–80 to +150°C	0.01°C	0.08°C				0.002°C/°C

DC Speeds vs. RMS Noise

Single Channel, 60 Hz (50 Hz) Operation. 1PLC and 5PLC RMS noise are included in DC specifications.

				RMS Noise[16], PPM of Range RMS Noise Calculator: Add 2.5 × "RMS Noise" to "ppm of range" (e.g., 10 V @ 0.006 PLC) "ppm of range" = 2.5 × 7.0 ppm + 2 ppm					Measurements into Buffer (rdgs/s)[13]		Measurement to PC (ms/rdg) Azero Off[13]		
Function	NPLC	Aperture (ms)	Digits	100 mV	1 V	10 V	100 V	300 V	Azero On	Azero Off	Ethernet	GPIB	USB
DCV	5[14]	83.3 (100)	7½	1.0	0.07	0.05	0.7	0.2	9.5 (8)	12 (10)	86.3 (104)	86.1 (102.8)	86.3 (103.1)
	1[14]	16.7 (20)	7½	0.9	0.12	0.1	0.8	0.35	42 (33)	59.8 (49.5)	19.4 (22.7)	19.5 (22.8)	19.9 (23.2)
	0.2[12, 14]	3.33 (4.0)	6½	2.5	0.32	0.3	2.5	1.0	50 (40)	60 (50)	19.4 (22.7)	19.5 (22.8)	19.9 (23.2)
	0.2[14]	3.33 (4.0)	6½	3.5	1.7	0.7	3.5	1.5	120 (100)	295 (235)	7.6 (8.3)	6.2 (6.8)	6.4 (7.0)
	0.06[15]	1.0 (1.2)	5½	12	3.0	1.5	8.0	3.5	205 (165)	935 (750)	1.40 (1.80)	1.50 (1.80)	1.60 (2.30)
	0.006[15]	0.100 (0.120)	4½	55	15	7.0	70	35	218 (215)	6,200 (5,500)	0.55 (0.57)	0.65 (0.67)	0.75 (0.77)
	0.0005[15]	0.0083 (0.001)	3½	325	95	95	900	410	270 (270)	14,600 (14,250)	0.50 (0.5)	0.60 (0.60)	0.70 (0.70)
2WΩ (≤10 kΩ)				10–100 Ω	1 kΩ	10 kΩ							
	5[14]	83.3 (100)	7½	2.0	0.5	0.4	—	—	9.5 (8)	12 (10)	87.0 (105)	86.1 (103)	86.5 (104)
	1[14]	16.7 (20)	7½	3.5	0.8	0.6	—	—	42 (33)	59.8 (49.5)	21.0 (24.3)	19.5 (22.8)	19.9 (23.2)
	0.2[12, 14]	3.33 (4.0)	6½	6.5	1.7	1.5	—	—	50 (40)	60 (50)	21.0 (24.3)	19.5 (22.8)	19.9 (23.2)
	0.2[14]	3.33 (4.0)	6½	8.0	4.5	5.5	—	—	120 (100)	295 (235)	7.6 (8.3)	6.2 (6.8)	6.4 (7.0)
	0.06[15]	1.0 (1.2)	5½	15	6	6.5	—	—	205 (165)	935 (750)	1.40 (1.80)	1.50 (1.80)	1.60 (2.30)
	0.006[15]	0.100 (0.120)	4½	60	15	15	—	—	218 (215)	6,200 (5,500)	0.55 (0.57)	0.65 (0.67)	0.75 (0.77)
	0.0005[15]	0.0083 (0.001)	3½	190	190	190	—	—	270 (270)	14,100 (13,700)	0.50 (0.5)	0.60 (0.60)	0.70 (0.70)
DCI				10 µA	100 µA	1 mA–100 mA	1 A	3 A					
	5[14]	83.3 (100)	7½	3.5	1.6	1.6	2.9	2.0	9.5 (8)	12 (10)	88 (103)	86.1 (102.8)	86.3 (103.1)
	1[14]	16.7 (20)	6½	3.5	1.1	1.1	2.2	1.8	42 (33)	59.8 (49.5)	21.0 (22.7)	19.5 (22.8)	19.8 (23.1)
	0.2[12, 14]	3.33 (4.0)	5½	50	5.0	3.0	4.0	8.0	50 (40)	60 (50)	19.4 (22.7)	19.5 (22.8)	19.8 (23.1)
	0.2[14]	3.33 (4.0)	4½	100	35	12	4.0	8.0	120 (100)	295 (235)	7.6 (8.3)	6.2 (6.8)	6.4 (7.0)
	0.06[15]	1.0 (1.2)	4½	350	35	20	8.0	20	205 (165)	935 (750)	1.40 (1.80)	1.50 (1.80)	1.60 (2.30)
	0.006[15]	0.100 (0.120)	4½	400	200	40	50	100	218 (215)	6,200 (5,500)	0.55 (0.57)	0.65 (0.67)	0.75 (0.77)
	0.0005[15]	0.0083 (0.001)	3½	2500	450	250	325	750	270 (270)	14,100 (13,700)	0.50 (0.5)	0.60 (0.60)	0.70 (0.70)
4WΩ				1 Ω	10–100 Ω	1 kΩ	10 kΩ						
	5[14]	83.3 (100)	7½	5.5	0.8	0.5	0.5	—	5 (4)	5.9 (4.7)	173 (206)	173 (206)	173 (206)
	1[14]	16.7 (20)	7½	15	1.4	0.5	0.7	—	23.5 (18.5)	29 (23)	39 (46)	39 (46)	39 (46)
	0.2[12, 14]	3.33 (4.0)	5½	100	30	10	50	—	26.5 (21)	30 (24)	39 (46)	39 (46)	39 (46)
	0.2[14]	3.33 (4.0)	5½	300	50	10	63	—	80 (60)	120 (95)	12.3 (14.5)	11.3 (13.3)	11.7 (13.7)
	0.06[15]	1.0 (1.2)	4½	500	50	15	70	—	140 (110)	285 (225)	6.2 (7.2)	6.3 (7.3)	6.5 (7.6)
	0.006[15]	0.100 (0.120)	4½	750	75	30	100	—	200 (195)	580 (565)	4.2 (4.4)	4.3 (4.5)	4.6 (4.8)
	0.0005[15]	0.0083 (0.001)	3½	3500	450	250	250	—	210 (205)	650 (645)	4.2 (4.4)	4.3 (4.5)	4.6 (4.8)
4WΩ OCOMP				1 Ω	10–100 Ω	1 kΩ	10 kΩ						
	5[14]	83.3 (100)	7½	5.5	0.8	0.5	0.5	—	2.5 (2.0)	2.9 (2.3)	343 (427)	341 (425)	342 (426)
	1[14]	16.7 (20)	7½	16	1.5	0.7	1.5	—	12.7 (10)	14 (11.2)	77 (95)	74 (92)	75 (93)
	0.2[12, 14]	3.33 (4.0)	6½	45	4.5	2.1	3.5	—	14 (11.2)	15 (12)	70 (86.5)	70 (86.5)	70 (86.5)
	0.2[14]	3.33 (4.0)	5½	500	50	13	30	—	46.5 (37)	56 (44)	22.7 (25)	20.5 (23)	21.1 (24)
	0.0005[15]	0.0083 (0.001)	3½	4500	650	400	400	—	129 (125)	215 (210)	6.7 (6.7)	6.8 (6.8)	7 (7)
Dry-CktΩ OCOMP				1–10 Ω	100 Ω	1 kΩ	2 kΩ						
	5[14]	83.3 (100)	6½	8.0	10	10	8.0	—	2.5 (2.0)	2.9 (2.3)	347 (430)	345 (428)	346 (429)
	1[14]	16.7 (20)	5½	17	22	25	28	—	12 (9.5)	13 (10)	80 (99)	77 (95)	78 (97)
	0.2[12, 14]	3.33 (4.0)	4½	50	50	50	50	—	14 (11.2)	15 (12)	70 (86.5)	70 (86.5)	70 (86.5)
	0.2[14]	3.33 (4.0)	3½	500	1000	1000	1500	—	35 (30)	45 (36)	27 (33)	25 (31)	26 (32)
	0.0005[15]	0.0083 (0.001)	2½	8500	8500	8500	8500	—	84 (84)	115 (110)	10.7 (10.7)	10.7 (10.7)	11 (11)

RTD Speeds vs. Noise

1 PLC and 5 PLC Noise are included in RTD Specifications.

Single Channel, 60Hz (50Hz) Operation				Add °C to Reading [16]		Measurements into Buffer [13] (rdg/s)		Measurement to PC [13] (ms/rdg) Azero Off		
Function	NPLC	Aperture (ms)	Digits	4-Wire	3-Wire	Azero On	Azero Off	Ethernet	GPIB	USB
OCOMP OFF	5 [14]	83.3 (100)	7½	0	0	5 (4)	5.9 (4.7)	173 (206)	173 (206)	173 (206)
	1[14]	16.7 (20)	7½	0	0	23.5 (18.5)	29 (23)	39 (46)	39 (46)	39 (46)
	0.2[12, 14]	3.33 (4.0)	5½	0.01	0.01	26.5 (21)	30 (24)	39 (46)	39 (46)	39 (46)
	0.2[14]	3.33 (4.0)	5½	0.18	0.18	80 (60)	120 (95)	12.3 (14.5)	11.3 (13.3)	11.7 (13.7)
	0.06[15]	1.0 (1.2)	4½	0.24	0.24	140 (110)	285 (225)	6.2 (7.2)	6.3 (7.3)	6.5 (7.6)
	0.006[15]	0.100 (0.120)	4½	0.37	0.37	200 (195)	580 (565)	4.2 (4.4)	4.3 (4.5)	4.6 (4.8)
	0.0005[15]	0.0083 (0.001)	3½	3.10	3.10	209 (205)	650 (645)	4.2 (4.4)	4.3 (4.5)	4.6 (4.8)
OCOMP ON	5 [14]	83.3 (100)	7½	0	0	2.5 (2.0)	2.9 (2.3)	343 (427)	341 (425)	342 (426)
	1[14]	16.7 (20)	7½	0	0	12.7 (10)	14 (11.2)	77 (95)	74 (92)	75 (93)
	0.2[12, 14]	3.33 (4.0)	6½	0.02	0.02	14 (11.2)	15 (12)	70 (86.5)	70 (86.5)	70 (86.5)
	0.2[14]	3.33 (4.0)	5½	0.38	0.38	46.0 (37)	56 (44)	22.7 (25)	20.5 (23)	21.1 (24)
	0.0005[15]	0.0083 (0.001)	3½	4.67	4.67	128 (125)	215 (210)	6.7 (6.7)	6.8 (6.8)	7 (7)

System Performance [13, 14]

3½-Digit Mode, Azero off, nPLC = 0.0005. Time includes function change from either DCV or 2WΩ to listed function.

Function	Function Change (ms)	Range Change (ms)	Auto-range (ms)
DCV or 2WΩ (<10 kΩ)	10	10	10
4WΩ (<10 kΩ)	20	20	20
DCI	10	10	10
Frequency or Period [17]	110	10	—
ACV or ACI [17]	20	85	300

Buffer Transfer Speed	Ethernet	GPIB	USB
Average for 1000 readings	2450/s	2000/s	1800/s
Average for 1000 readings with timestamp	2300/s	1800/s	1600/s

Card	Command	Single Command Excecution Time (ms)		
		Ethernet	GPIB	USB
3720, 3721, 3722, 3730	channel.close (ch_list) or channel.open (ch_list)	5.7	5.8	6.1
3723, 3724 3731, 3732 [18]	channel.close (ch_list) or channel.open (ch_list)	2.3	2.4	2.7
3740	channel.close (ch_list 1-28) or channel.open (ch_list 1-28)	10.7	10.8	11.1
	channel.close (ch_list 29-32) or channel.open (ch_list 29-32)	22.7	22.8	23.1

DC Measurement Characteristics

DC Volts

A-D Linearity	1.0ppm of reading + 2.0 ppm of range.
Input Impedance	**100 mV–10 V Ranges:** Selectable >10 GΩ // <400 pF or 10 MΩ ±1%. **100 V–300 V Ranges:** 10 MΩ ±1%.
Input Bias Current	<50 pA at 23°C with dmm.autozero=dmm.OFF or dmm.inputdivider=dmm.ON.
Common Mode Current	<500 nA p-p for ≤1 MHz.
Autozero Off Error	For DCV ±1°C and ≤10 minutes, add ±(8 ppm of reading + 5 µV).
Input Protection	300 V all ranges.
Common Mode Voltage	300 V DC or 300 Vrms (425 V peak for AC waveforms) between any terminal and chassis.

Resistance

Max. 4WΩ Lead Resistance	5 Ω per lead for 1 Ω range; 10% of range per lead for 10 Ω–1 kΩ ranges; 1 kΩ per lead for all other ranges.
Max. 4WΩ Lead Resistance (Dry Ckt)	0.5 Ω per lead for 1 Ω range; 10% of range per lead for 10 Ω–100 Ω ranges; 50 Ω per lead for 1 kΩ–2 kΩ ranges.
Input Impedance	**1 Ω–10 Ω Ranges:** 99 kΩ ±1% // <1 µF. **100 Ω–2 kΩ Ranges:** 10 MΩ ±1% // <0.015 µF.
Offset Compensation	Selectable on 4WΩ 1 Ω–10 kΩ ranges.
Open Lead Detector	Selectable per channel. 1.5 µA, ±20% sink current per DMM SHI and SLO lead. Default on.
Continuity Threshold	Adjustable 1 to 1000 Ω.
Autozero Off Error	For 2WΩ ±1°C and ≤10 minutes, add ±(8 ppm of reading + 0.5 mΩ) for 10 Ω and 5 mΩ for all other ranges.
Input Protection	300 V all ranges.

DC Current

Autozero OFF Error For ±1°C and ≤10 minutes, add ±(8 ppm of reading + range error). Refer to table below.

Range	3 A	1 A	100 mA	10 mA	1 mA	100 µA	10 µA
Shunt Resistance guaranteed by design	0.05 Ω	0.05 Ω	1 Ω	10 Ω	100 Ω	1 kΩ	6 kΩ
Burden Voltage	<1.75 V	<0.55 V	<0.4 V	<150 mV	<130 mV	<105 mV	<61 mV
Burden Voltage with 3721 card	<2.35 V	<1.15 V	<0.4 V	<150 mV	<130 mV	<105 mV	<61 mV
Autozero OFF "of range" Error	100 µA	100 µA	5 µA	0.5 µA	50 nA	5 nA	0.85 nA
For each additional amp after ±1.5 A input, add the following to ppm of range:							
	—	120	60	60	60	60	95

Input Protection 3 A, 250 V fuse.

Thermocouples

Conversion	ITS-90.
Reference Junction	Internal, External, or Simulated (Fixed).
Open Lead Detector	Selectable per channel. Open >1.15 kΩ ±50 Ω. Default on.
Common Mode Isolation	300 V DC or 300 Vrms (425 V peak for AC waveforms), >10 GΩ and <350 pF any terminal to chassis.

DC Notes

1. 20% overrange on DC functions except 1% on 300 V range and 3.33% on 3 A range.
2. ±5% (measured with 10 MΩ input resistance DMM, >10 GΩ DMM on 10 MΩ and 100 MΩ ranges). Refer to table for other 2W/4W configurations. For Dry Circuit, +20%, <1 mV with dmm.offsetcompensation=ON for 100 Ω–2 kΩ ranges.

Range	2W	4W	4W–Kelvin	Ocomp 4W	Ocomp 4W–Kelvin
1, 10 Ω	8.2 V	8.2 V	8.2 V	12.1 V	12.1 V
100, 1 kΩ	13.9 V	14.1 V	13.9 V	15.0 V	12.7 V
10 kΩ	9.1 V	9.1 V	9.1 V	0.0 V	0.0 V
100 kΩ, 1 MΩ	12.7 V	14.7 V	12.7 V	—	—
10 MΩ, 100 MΩ	6.4 V	6.4 V	6.4 V	—	—

3. Relative to calibration accuracy.
4. Add the following additional uncertainty with -ST accessory:

Card	±(ppm of range)			±(ppm of reading + ppm of range)			
	100 mV	1 V	10 V	100 kΩ	1 MΩ	10 MΩ	100 MΩ
3720, 3721, 3722, 3730	45	4.5	–	8 + 5	8 + 0.5	—	—
3723	60	6.0	–	8 + 6	8 + 0.5	—	—
3724	45	4.5	–	8 + 5	80 + 0.5	250 + 1	5000 + 1
3731	800	80	8	8 + 80	40 + 8	0 + 25	0 + 15
3732 (Quad 4×28)	200	20	2	8 + 20	40 + 2	0 + 7	0 + 4

5. Specifications are for 4-wire Ω, 1 Ω–1 kΩ with offset compensation on. For Series 3700A plug-in cards, L_{SYNC} and offset compensation on. 1 Ω range is 4-wire only. 3724 card 1 kΩ–100 MΩ ranges only. 3731 card: 100 Ω–100MΩ ranges only.
   For 2-wire Ω specifications, add the following to "ppm of range" uncertainty:

DMM Connect Relays	Rel Enable	Rear Panel Connector or 3700A Card	3724 Card	3731 Card
CONNECT_ALL	ON	100 mΩ	500 mΩ	900 mΩ
CONNECT_ALL	OFF	1.5 Ω	64 Ω	2.3 Ω
CONNECT_TWO_WIRE	ON	700 mΩ	1.2 Ω	1.5 Ω
CONNECT_TWO_WIRE	OFF	1.5 Ω	64 Ω	2.3 Ω

6. Test current with dmm.offsetcompensation=OFF, ±5%.
7. Add the following to "ppm of reading" uncertainty when using Series 3700A Plug-in Cards in Operating Environment ≥50% RH.

Card	10 kΩ	100 kΩ	1 MΩ	10 MΩ	100 MΩ
3720, 3721, 3724, 3730, 3731, 3732 (Quad 4×28) with MTC D-Shell connector	1 ppm	10 ppm	0.01%	0.1%	1%
3720, 3721, 3724, 3730, 3731, 3732 (Quad 4×28) with -ST screw terminal module	10 ppm	100 ppm	0.1%	1%	10%
3722 and 3723	10 ppm	100 ppm	0.1%	1%	10%

Series 3700A Plug-in Cards Operating Environment: Specified for 0° to 50°C, ≤70%RH at 35°C.

8. Dry-Ckt Ω is 4-wire only. Specifications with offset compensation and L_{SYNC} on.

Card	Ranges
3720, 3721, and 3730	1 Ω – 2 kΩ
3722, 3723, and 3732	10 Ω – 2 kΩ
3724	1 kΩ – 2 kΩ
3731	100 Ω – 2 kΩ

9. Includes Analog Backplane 15-pin rear panel connector. For 3721, refer to DC Current table for additional uncertainties.
10. For L_{SYNC} On, line frequency ±0.1%.

	nPLC	5	1	<0.2	<0.01
L_{SYNC} On	NMRR	110 dB	90 dB	45 dB	—
L_{SYNC} Off	NMRR	60 dB, ±2 dB	60 dB, ±2 dB	—	—

11. For 1 kΩ unbalance in LO lead. AC CMRR is 70 dB.

nPLC	5	1	0.2 [12]	≤0.2
CMRR	140 dB	140 dB	120 dB	80 dB

12. For L_{SYNC} On.
    Reading rates are for 60 Hz (50 Hz) operation using factory defaults operating conditions dmm.reset("all"), Autorange off, dmm.autodelay=dmm.OFF, dmm.opendetector=dmm.OFF, format.data.=format.SREAL. Ranges as follows: DCV = 10 V, 2WΩ/4WΩ = 1 kΩ, DCI = 1 mA, Dry-Ckt Ω = 10 Ω, ACI = 1 mA, and ACV = 1 V. For Dry-Ckt Ω with Offset Comp OFF: 2 kΩ, 60 rdg/s max. Dry-Ckt Ω with Offset Comp ON 2 kΩ, 29.5 rdg/s max. For temperature reading rates use DCV for T/C and 2WΩ for Thermistor. Speeds are typical and include measurements and data transfer out the Ethernet, GPIB, or USB.
13. DMM configured for single reading, dmm.measurecount=1, and print(dmm.measure()). May require additional settling delays for full accuracy, depending on measurement configuration.
14. DMM configured for multisample readings and single buffer transfer, dmm.measurecount=1000, buf=dmm.makebuffer(1000), dmm.measure(buf), and printbuffer(1,1000,buf).
15. dmm.autozero=dmm.ON. RMS noise using low thermal short for DCV, 2WΩ, 4WΩ, and Dry-Ckt Ω. For DCI, dmm.connect=dmm.CONNECT_NONE or 0. For RTD, noise using low thermal 190 Ω precision resistor. Includes 3721 card accuracies. RMS noise values are typical.
16. For DCV or 2WΩ to Frequency or Period, dmm.nplc=0.2 and dmm.aperture=0.01 sec. For ACI or ACV, dmm.detectorbandwidth=300. For ACI or ACV with dmm.autodelay=dmm.ON, best speed is 65 ms.
17. Speeds are within same multiplexer bank. Add an additional 8 ms when changing banks or slots.
18. When properly zeroed using REL function.

AC Specifications

Function	Range [1]	Resolution	Calibration Cycle	Accuracy: ±(% of reading + % of range), 23°C ±5°C					
				3 Hz–5 Hz	5 Hz–10 Hz	10 Hz–20 kHz	20 kHz–50 kHz	50 kHz–100 kHz	100 kHz–300 kHz
Voltage [2]	100.0000 mV	0.1 µV	90 Day (100 mV–100 V)	1.0 + 0.03	0.30 + 0.03	0.05 + 0.03	0.11 + 0.05	0.6 + 0.08	4.0 + 0.5
	1.000000 V	1 µV							
	10.00000 V	10 µV	1 Year (100 mV–100 V)	1.0 + 0.03	0.30 + 0.03	0.06 + 0.03	0.12 + 0.05	0.6 + 0.08	4.0 + 0.5
	100.0000 V	100 µV							
	300.0000 V	1 mV	90 Day	1.0 + 0.05	0.30 + 0.05	0.05 + 0.05	0.11 + 0.08	0.6 + 0.11	4.0 + 0.8
	300.0000 V	1 mV	1 Year	1.0 + 0.05	0.30 + 0.05	0.06 + 0.05	0.12 + 0.08	0.6 + 0.11	4.0 + 0.8
			Temp. Coeff./°C [3] (all ranges)	0.010 + 0.003	0.030 + 0.003	0.005 + 0.003	0.006 + 0.005	0.01 + 0.006	0.03 + 0.01
Current [2]				3 Hz–5 Hz	5 Hz–10 Hz	10 Hz–2 kHz	2 kHz–5 kHz	5 kHz–10 kHz	
	1.000000 mA [7]	1 nA	90 Day/1 Year	1.0 + 0.04	0.30 + 0.04	0.08 + 0.03	0.09 + 0.03	0.09 + 0.03	
	10.00000 mA	10 nA		1.0 + 0.04	0.30 + 0.04	0.08 + 0.03	0.09 + 0.03	0.09 + 0.03	
	100.0000 mA	100 nA		1.0 + 0.04	0.30 + 0.04	0.08 + 0.03	0.09 + 0.03	0.09 + 0.03	
	1.000000 A	1 µA		1.0 + 0.04	0.30 + 0.04	0.20 + 0.04	0.88 + 0.04	2.0 + 0.04	
	3.000000 A	10 µA		1.0 + 0.05	0.30 + 0.05	0.20 + 0.05	0.88 + 0.05	2.0 + 0.05	
			Temp. Coeff./°C [3] (all ranges)	0.10 + 0.004	0.030 + 0.004	0.005 + 0.003	0.006 + 0.005	0.006 + 0.005	
Frequency [4] and Period				Accuracy ±(ppm of reading + offset ppm)					
				3 Hz–500 kHz	3 Hz–500 kHz	333 ms–2 µs			
	100.0000 mV to 300.0000 V	0.333 ppm	90 Day/1 Year (all ranges)	80 + 0.333	80 + 0.333	(0.25 s gate)			
		3.33 ppm		80 + 3.33	80 + 3.33	(100 ms gate)			
		33.3 ppm		80 + 33.3	80 + 33.3	(10 ms gate)			

Additional Uncertainty ±(% of reading)

Low Frequency Uncertainty	Detector Bandwidth		
	3 (3 Hz–300 kHz)	30 (30 Hz–300 kHz)	300 (300 Hz–300 kHz)
20 Hz–30 Hz	0	0.3	–
30 Hz–50 Hz	0	0	–
50 Hz–100 Hz	0	0	4.0
100 Hz–200 Hz	0	0	0.72
200 Hz–300 Hz	0	0	0.18
300 Hz–500 Hz	0	0	0.07
>500 Hz	0	0	0

Additional Uncertainty ±(% of reading)	Detector Bandwidth	Crest Factor [5] Maximum Crest Factor: 5 at full-scale			
		1–2	2–3	3–4	4–5
5 Hz–10 Hz	3	0.50	1.20	1.30	1.40
10 Hz–30 Hz	3	0.20	0.30	0.60	0.90
30 Hz–100 Hz	3 or 30	0.20	0.30	0.60	0.90
>100 Hz	3 or 30	0.05	0.15	0.30	0.40
300 Hz–500 Hz	300 only	0.50	1.20	1.30	1.40
≥500 Hz	300 only	0.05	0.15	0.30	0.40

AC Speeds

Single Channel, 60Hz (50Hz) Operation

Function	Detector Bandwidth	NPLC	Aperture (ms)	Measurements into Buffer[9] (rdg/s)			Measurement to PC[9] (ms/rdg)		
				Digits	Azero On	Azero Off	Ethernet	GPIB	USB
ACI / ACV	3	N/A	N/A	6½	0.45 (0.45)	N/A	2150 (2150)	2150 (2150)	2150 (2150)
	30	N/A	N/A	6½	2.5 (2.5)	N/A	400 (400)	400 (400)	400 (400)
	300	1.0[10]	16.67 (20)	6½	42 (33)	59.5 (50)	19.4 (22.7)	19.5 (22.8)	19.8 (23.1)
	300	0.2[10]	3.33 (4.0)	6½	120 (100)	295 (235)	7.6 (8.3)	6.2 (6.8)	6.4 (7.0)
	300	0.06[11]	1.0 (1.2)	5½	170 (165)	935 (750)	1.40 (1.80)	1.50 (1.80)	1.60 (2.30)
	300	0.006[11]	0.100 (0.120)	4½	218 (215)	6,200 (5,500)	0.55 (0.57)	0.65 (0.67)	0.75 (0.77)
	300	0.0005[11]	0.0083 (0.001)	3½	218 (215)	14,600 (14,250)	0.50 (0.5)	0.60 (0.60)	0.70 (0.70)
Frequency/ Period	N/A	N/A	10–273	N/A	2× input period + gate time	N/A	2× input period + gate time + 2.7ms	2× input period + gate time + 2.8ms	2× input period + gate time + 3.1ms

AC Measurement Characteristics

AC Volts

Measurement Method AC-coupled, True RMS.

Input Impedance 1 MΩ ±2% // by <150 pF.

Input Protection 300 VDC or 300 Vrms rear inputs or 37xx cards.

AC Current

Measurement Method AC-coupled, True RMS.

Range	3 A	1 A	100 mA	10 mA	1 mA
Shunt Resistance guaranteed by design	0.05 Ω	0.05 Ω	1.0 Ω	10 Ω	100 Ω
Burden Voltage Rear Panel	<1.75 V rms	<0.55 V rms	<0.4 V rms	<150 mV rms	<125 mV rms
Burden Voltage 3721 Card	<2.4 V rms	<1.0 V rms	<0.6 V rms	<200 mV rms	<130 mV rms

Input Protection 3 A, 250 V fuse.

Frequency and Period

Measurement Method Reciprocal Counting technique.

Gate Time dmm.aperture=0.273→0.01. Default 0.01s.

AC General

AC CMRR[6] 70 dB.

Volt·Hertz Product $\leq 8\times10^7$ Volt·Hz (guaranteed by design), $\leq 2.1\times10^7$ Volt·Hz verified. Input frequency verified for $\leq 3\times10^5$ Hz.

AC Notes

1. 20% overrange on AC functions except 1% on 300 V and 3.33% on 3 A. Default resolution is 5½ digits, maximum useable resolution is 6½ with 7½ digits programmable.
2. Specification are for Detector Bandwidth 3 and sinewave inputs >5% of range. Detector Bandwidth 3 and 30 are multi-sample A/D conversions. Detector bandwidth 300 is a single A/D conversion, programmable from 0.0005 PLC to 15 PLC. Default condition set to 1 PLC.
3. Applies to 0°–18°C and 28°–50°C.
4. Specified for square wave inputs. Input signal must be >10% of ACV range. If input is <20 mV on the 100 mV range then the frequency must be >10 Hz. For sinewave inputs, frequency must be >100 Hz.
5. Applies to non-sinewave inputs 5 Hz–>10 kHz, and DC content ≤3% of range.
6. For 1 kΩ unbalance in LO lead.
7. For 3721, 1 mA ACI, add 0.05% to "of reading" uncertainty from 250 Hz → 10 kHz.
8. Shunt resistance guaranteed by design.
9. Reading rates are for 60 Hz (50 Hz) operation using factory defaults operating conditions dmm.reset("all"), Autorange off, dmm.autodelay=dmm.OFF, dmm.opendetector=dmm.OFF, format.data.=format.SREAL. Ranges as follows: DCV = 10 V, 2WΩ/4WΩ = 1 kΩ, DCI = 1 mA, Dry-Ckt Ω = 10 Ω, ACI = 1 mA, and ACV = 1 V. For Dry-Ckt Ω with Offset Comp OFF 2 kΩ, 60 rdg/s max. Dry-Ckt Ω with Offset Comp ON 2 kΩ, 29.5 rdg/s max. For temperature reading rates use DCV for T/C and 2WΩ for Thermistor. Speeds are typical and include measurements and data transfer out the Ethernet, GPIB, or USB.
10. DMM configured for single reading, dmm.measurecount=1, and print(dmm.measure()). May require additional settling delays for full accuracy, depending on measurement configuration.
11. DMM configured for multisample readings and single buffer transfer, dmm.measurecount=1000, buf=dmm.makebuffer(1000), dmm.measure(buf), and printbuffer(1,1000,buf).

General

Expansion Slots	6.
Power Line	Universal, 100 V to 240 V.
Line Frequency	50 Hz and 60 Hz, automatically sensed at power-up.
Power Consumption	28 VA with DMM and display, up to 140 VA with six 37xx cards.
Real Time Clock	Battery backed, 10 years typical life.
EMC	Conforms to European Union EMC Directive.
Safety	Conforms to European Union Low Voltage Directive.
Vibration	MIL-PRF-28800F Class 3, Random.
Warm-Up	2 hours to rated accuracy.
Digital I/O	25-pin female D-shell.

	I/O 1–9	I/O 10–14	Vext
ISINK, max.	5 mA	250 mA	—
ISOURCE, max.	960 µA	980 µA	—
Absolute VIN	5.25 V to –0.25 V	5.25 V to –0.25 V	5 V to 33 V
VIH min	2.2 V	2.2 V	—
VIL max	0.7 V	0.7 V	—
VOL max at 5 mA Isink	0.7 V	0.7 V	—
VOL max at Isink max	—	2.3 V	—
VOH min, 0.4 mA source	2.7 V	2.4 V	—
Min VIN pulse	2 µs	10 µs	—
Min VO pulse	1 µs	50 µs	—

I/O 1–9

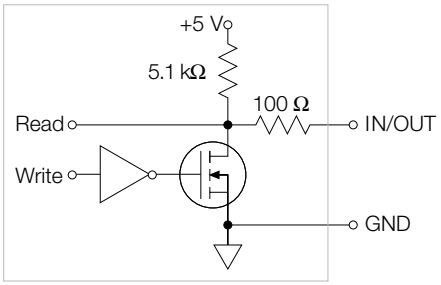

I/O 10–14

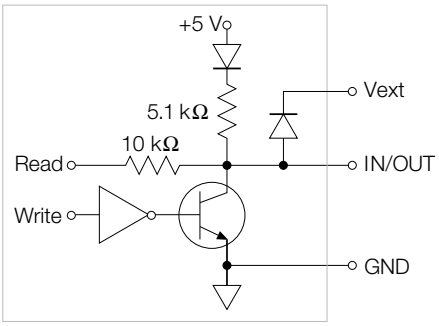

Triggering and Memory	
Window Filter Sensitivity	0.01%, 0.1%, 1%, 10%, or full-scale of range (none).
Trigger Delay	0 to 99 hrs. (10µs step size).
External Trigger Delay	<10 µs.
Memory	Up to 650,000 time-stamped readings with Web page disabled. Additional memory available with external "thumb drive."
Non-volatile Memory	Single user save setup, with up to 75 DMM configurations and ≥600 channel patterns (dependent on name length, DMM function and configuration, and pattern image size). Additional memory available with external "thumb drive."
Math Functions	Rel, dB, Limit Test, %, 1/x, and mX+b with user defined displayed.
Remote Interface	
Ethernet	RJ-45 connector, LXI Class B Version 2, 10/100BT, no auto MDIX.
GPIB	IEEE-488.1 compliant. Supports IEEE-488.2 common commands and status model topology.
USB Device (rear panel, type B)	Full speed, USBTMC compliant.
USB Host (front panel, type A)	USB 2.0, support for thumb drives.
LXI Compliance	LXI Class B Version 2 with IEEE 1588 precision time protocol.
LXI Timing (applies to scanning) and Specification	
Receive LAN[0–7] Event Delay	n/s (not specified) min., 800 µs typ., n/s max.
Alarm to Trigger Delay	25 µs min., 50 µs typ., n/s max.
Generate LAN[0–7] Event	n/s min., 800 µs typ., n/s max. (minimums are probabilistic and represent a 95% confidence factor).
Clock Accuracy	25 ppm.
Synchronization Accuracy	<150 ns (probabilistic and represents a 95% confidence factor).
Timestamp Accuracy	100 µs.
Timestamp Resolution	20 ns.
Language	Embedded Test Script Processor (TSP) accessible from any host interface. Responds to individual Instrument Control Library (ICL) commands. Responds to high-speed test scripts comprised of ICL commands and Test Script Language (TSL) statements (e.g., branching, looping, math, etc.). Able to execute high-speed test scripts stored in memory without host intervention.
IP Configuration	Static or DHCP.
Password Protection	11 characters
Minimum PC Hardware	Intel Pentium 3, 800 MHz, 512 Mbyte RAM, 210 Mbyte disk space or better.
Operating Systems/Software	Windows® 2000 and XP compatible, supports Web browsers with Java plug-in (requires Java plug-in 1.6 or higher). Web pages served by 3706A.
Operating Environment	Specified for 0° to 50°C, ≤80% RH at 35°C, altitude up to 2000 meters.
Storage Environment	–40° to 70°C.
Dimensions	
Rack Mounted	89 mm high × 483 mm wide × 457 mm deep (3.5 in. × 19 in. × 18 in.).
Bench Configuration (includes handle and feet)	104 mm high × 483 mm wide × 457 mm deep (4.125 in. × 19 in. × 18 in.)
Shipping Weight	13 kg (28 lbs).

Ordering Information

Mainframes

3706A	Six-Slot System Switch with High Performance DMM
3706A-S	Six-Slot System Switch
3706A-SNFP	Six-Slot System Switch, without front panel display and keypad

Plug-in Cards

3720	Dual 1×30 Multiplexer Card (Auto CJC when used with 3720-ST)
3721	Dual 1×20 Multiplexer Card (Auto CJC when used with 3721-ST)
3722	Dual 1×48, High Density, Multiplexer Card
3723	Dual 1×30, High Speed, Reed Relay Multiplexer Card
3724	Dual 1×30 FET Multiplexer Card
3730	6×16, High Density, Matrix Card
3731	6×16 High Speed, Reed Relay Matrix Card
3732	Quad 4×28, Ultra-High Density, Reed Relay Matrix Card
3740	32 Channel Isolated Switch Card
3760	10-Channel High Current Multiplexer Card
3761	10-Channel Low Current Multiplexer Card
3762	10-Channel High Voltage Multiplexer Card
3765	Hall Effect Card

Supplied Accessories

Test Script Builder Software Suite CD

Ethernet Crossover Cable (174694600)

Series 3700A Product CD (includes LabVIEW®, IVI C, and IVI.COM drivers)

Available Accessories

GPIB Interfaces and Cables

7007-1	Shielded GPIB Cable, 1 m (3.5 ft)
7007-2	Shielded GPIB Cable, 2 m (6.6 ft)
KPCI-488LPA	IEEE-488 Interface/Controller for the PCI Bus
KUSB-488B	IEEE-488 USB-to-GPIB Interface Adapter

Digital I/O, Trigger Link, and TSP-Link

2600-TLINK	Trigger I/O to Trigger Link Interface Cable, 1 m (3.3 ft)
CA-126-1	Digital I/O and Trigger Cable, 1.5 m (4.9 ft)
174694600	CAT5E Crossover Cable for TSP-Link

Multimeter Connectors

3706-BAN	DMM Adapter Cable, 15-pin D-sub to banana jacks, 1.4 m (4.6 ft)

3706-BKPL	Analog Backplane Extender Board, 15-pin D-sub to terminal block
8620	Shorting Plug

Rack Mount Kit

4288-10	Fixed Rear Rack Mount Kit

Available Services

Mainframe 3706A and 3706A-NFP

3706A-3Y-EW	1 Year Factory Warranty Extended to 3 Years
3706A-5Y-EW	1 Year Factory Warranty Extended to 5 Years
C/3706A-3Y-STD	Calibration Contract, 3 Years, Standard Calibration*
C/3706A-3Y-DATA	Calibration Contract, 3 Years, Z540 Compliant Calibration with Data*
C/3706A-3Y-ISO	Calibration Contract, 3 Years, ISO 17025 Accredited Calibration*
C/3706A-5Y-STD	Calibration Contract, 5 Years, Standard Calibration*
C/3706A-5Y-DATA	Calibration Contract, 5 Years, Z540 Compliant Calibration with Data*
C/3706A-5Y-ISO	Calibration Contract, 5 Years, ISO 17025 Accredited Calibration*

Mainframe 3706A-S and 3706A-SNFP

3706A-S-3Y-EW	1 Year Factory Warranty Extended to 3 Years
3706A-S-5Y-EW	1 Year Factory Warranty Extended to 5 Years

Software Services
System Development or Implementation

Other service contracts are available; please contact us for details.

*Not available in all countries.

Plug–in Cards for Series 3700A Mainframes

- Multiplexer, matrix, and I/O cards
- Relay closures automatically counted and stored in each card's onboard memory
- Unlimited contact life with solid-state relay (3724)
- Automatic CJC for temperature measurements when used with screw terminal accessory (3720, 3721, 3724)

Specifications for Plug-In Cards

Additional Series 3700A cards are currently in development. For a current list of cards and specifications, visit tek.com.

	No. of Channels	Card Configuration	Type of Relay	Contact Configuration	Max. Voltage	Max. Current Switched	Comments
3720	60 (Dual 1×30)	Multiplexer	Latching electromechanical	2 Form A	300 V	1 A	2 independent 1×30 multiplexers. Automatic temperature reference when used with screw terminal accessory (3720-ST)
3721	40 (dual 1×20)	Multiplexer	Latching electromechanical	2 Form A	300 V (ch 1–40), 60 V (ch 41–42)	2 A (ch 1–40), 3 A (ch 41–42)	2 independent 1×20 multiplexers. Automatic temperature reference when used with screw terminal accessory (3721-ST)
3722	96 (dual 1×48)	Multiplexer	Latching electromechanical	2 Form A	300 V	1 A	2 independent 1×48 multiplexers
3723	60 (dual 1×30) or 120 single-pole (dual 1×60)	Multiplexer	Dry reed	1 Form A	200 V	1 A	2 independent 1×30 multiplexers
3724	60 (dual 1×30)	Multiplexer	FET solid-state	2 Form A	200 V	0.1 A	2 independent 1×30 multiplexers. Automatic temperature reference when used with screw terminal accessory (3724-ST)
3730	6×16	Matrix	Latching electromechanical	2 Form A	300 V	1 A	Columns can be expanded through the backplane or isolated by relays
3731	6×16	Matrix	Dry reed	2 Form A	200 V	1 A	Relay actuation time of 0.5 ms. Columns can be expanded through the backplane or isolated by relays
3732	448 crosspoints (Quad 4×28)	Matrix	Dry reed	1 Form A	200 V	0.75 A	Banks can be connected together via bank configuration relays to create a single 4×112 or dual 4×56 matrix. Analog backplane relays also included for card-to-card expansion. Row expansion with 3732-ST-R accessory to create a dual 8×28 or single 16×28 matrix.
3740	32	Independent	Latching electromechanical	28 Form C, 4 Form A	300 VDC/ 250 VAC (Form A)	2 A (Form C), 7 A (Form A)	32 general purpose independent channels.
3760	10	Multiplexer	Nonlatching electromechanical	2 Form C	500V	5 A	Single 1×10 high current multiplexer
3761	10	Multiplexer	Dry reed	Form A	30 V	100 mA	Single 1×10 low current multiplexer
3762	10	Multiplexer	Dry reed	2 Form A	1000 V	0.5 A	Single 1×10 high voltage multiplexer
3765	4×5	Matrix	Nonlatching electromechanical and dry reed	Form A	8 V	100 mA	Specialty 4×5 matrix for Hall Effect and van der Pauw measurements.

Plug-in Card Accessories

	Cables	Screw Terminal Block
3720	3720-MTC-3	3720-ST
3721	3721-MTC-3	3721-ST
3722	3722-MTC-1.5, 3722-MTC-3	
3723	3720-MTC-3	3723-ST, 3723-ST-1
3724	3720-MTC-3	3724-ST
3730	3721-MTC-3	3730-ST
3731	3721-MTC-3	3731-ST
3732		3732-ST-C, 3732-ST-R
3740	3721-MTC-3	3740-ST

3720 Dual 1×30 Multiplexer Card

60 differential channels, automatic CJC w/3720-ST accessory

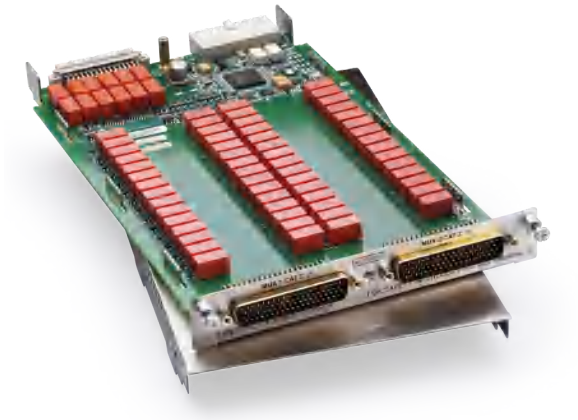

The 3720 offers two independent banks of 1×30 two-pole multiplexers. It is ideal for general purpose switching, including temperature measurements. The two banks can automatically be connected to the Series 3700A mainframe backplane and optional DMM through the analog backplane connection relays. This connection allows the mainframe to reconfigure the card to a single 1×60 two-pole multiplexer or to enable card-to-card expansion for even larger configurations.

Other features of the 3720 include its ability to be reconfigured to coordinated four-pole operation for additional measurement flexibility. Furthermore, the 3720 supports thermocouple-type temperature measurements when used with the 3720-ST (screw terminal) accessory providing automatic cold junction compensation (CJC).

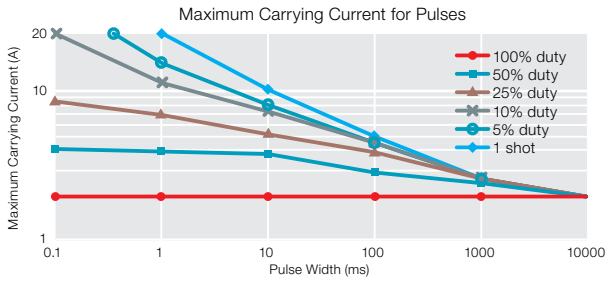

1. 3706A ambient temperature <28°C.
2. One shot repetition rate > 10 seconds.
3. Signal path routed only through one card (not through backplane).
4. Only one channel closed at a time.
5. Contact life specification unaffected if pulse width and carry current are not exceeded.

Key Features

- 60 two-pole channels or 30 four-pole channels for general purpose switching
- Automatic CJC for temperature measurements when used with 3720-ST accessory
- Analog backplane connection relays provide easy bank and card interconnections
- 300 V, 1 A switched or 2 A carry signal capacity; 60 Ω, 125 VA
- Screw terminal connections provided with removable 3720-ST accessory
- Relay closures stored in onboard memory
- Latching electromechanical relays

The 3720 uses two 78-pin male D-sub connectors for signal connections. For screw terminal or automatic CJC, use the detachable 3720-ST accessory.

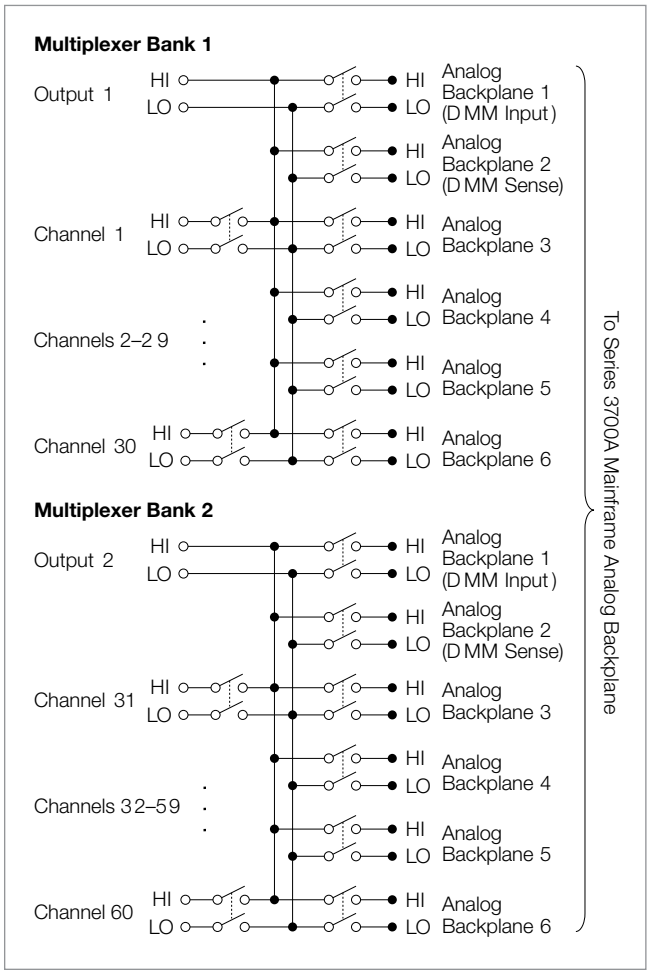

Tektronix

Specifications

Multiplexer Configuration	Two independent 1×30 2-pole multiplexers. Banks can be isolated from the backplane by relays. Card can be configured for 2 and 4 wire.
Contact Configuration	2-pole form A.
Connector Type	Two 78-pin male D-shells.
3720-ST Screw Terminal Option	#22 AWG typical wire size with 0.062 inch O.D. 124 conductors maximum. #16 AWG maximum wire size with 0.092 inch O.D. 36 conductors per card maximum.
Maximum Signal Level	**Channels 1–60:** 300 V DC or RMS, 1 A switched (2 A carry), 60 Ω, 125 VA.
Common Mode Voltage	300 V DC or RMS between any terminal and chassis.
Volt-Hertz Limit	8×10^7.
Contact Life	$>10^5$ operations at maximum signal level. $>10^8$ operations no load.[1]

		Dual 1×30 [3]	Single 1×60 [2, 3]
Channel Resistance (end of contact life)		<1.0 Ω	<1.5 Ω
Contact Potential (differential)		<±1 µV	<± 3 µV
Offset Current		<±250 pA	<±250 pA
Isolation	Differential	10^9 Ω, 250 pF	10^9 Ω, 450 pF
	Bank-Bank	10^{10} Ω, 75 pF	—
	Channel-Channel	10^9 Ω, 75 pF	10^9 Ω, 75 pF
	Common Mode	10^9 Ω, 200 pF	10^9 Ω, 400 pF
Crosstalk Channel-Channel	300 kHz		<–55 dB
	1 MHz		<–50 dB
	20 MHz		<–20 dB
	Bandwidth		10 MHz

Typical Scanning Speeds

Switch Only [4] — Sequential scanning, single channel, immediate trigger advance >120 ch/s.

With Measurements Into Memory [5]

DCV (10 V range) or 2W Ohms (1 kΩ range) >110 ch/s.

Thermocouple >110 ch/s.

3- or 4-Wire RTD >100 ch/s.

4-Wire Ohms (1 kΩ range) >100 ch/s.

ACV (10 V range) >110 ch/s.

Notes

1. Open detector enabled during thermocouple measurements. Minimum signal level 10 mV, 10 µA.
2. 3706A mainframe with all DMM backplane relays disconnected. Maximum two card backplane relays closed.
3. Connections made using 3720-ST accessory.
4. Scanning script local to 3706A mainframe, within same bank, and break before make switching.
5. 3706A mainframe with autorange off, limits off, dmm.autozero=0, dmm.autodelay=0, 4½ digits (NPLC=0.006), for ACV dmm.detectorbandwidth=300, for OHMs dmm.offsetcompensation=off, dmm.opendetector=off. Scanning script local to mainframe, sequential scan within same bank (2-pole) or card (4-pole), and break before make switching.

General

Actuation Time	4 ms.
Temperature Accuracy using Automatic CJC with 3720-ST Accessory	1°C for J, K, T and E types (see mainframe specification for details).
Relay Type	Latching electromechanical.
Relay Drive Scheme	Matrix.
Interlock	Backplane relays disabled when interlock connection is removed.
Operating Environment	Specified for 0° to 50°C. Specified to 70% R.H. at 35°C.
Storage Environment	–25° to 65°C.
Weight	2.5 lbs.
Safety	Conforms to European Union Directive 73/23/EEC, EN61010-1.
EMC	Conforms to European Union Directive 2004/108/EC, EN61326-1.

Ordering Information

3720	Dual 1×30 Multiplexer Card

Available Accessories

3720-MTC-3	78-pin D-sub Female to Male Cable, 3 m (10 ft.)
3720-ST	Screw Terminal Block (required for auto CJC thermocouple measurements)
7401	Type K Thermocouple Wire (100 ft.)

Available Services

3720-3Y-EW-STD	1-year factory warranty extended to 3 years from date of shipment
3720-5Y-EW-STD	1-year factory warranty extended to 5 years from date of shipment
C/3720-3Y-STD	3 (Z540-1 compliant) calibrations within 3 years of purchase*

*Not available in all countries

3721 Dual 1×30 Multiplexer Card

40 differential channels, automatic CJC w/3721-ST accessory

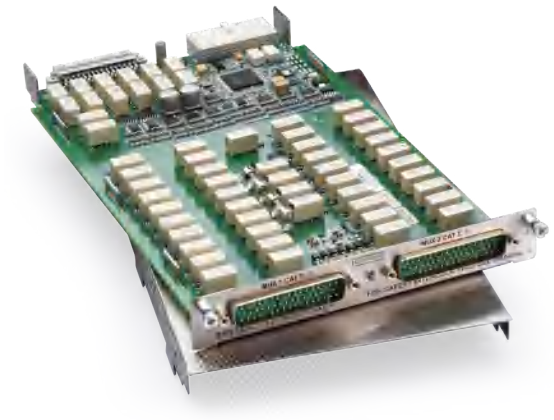

The 3721 offers two independent banks of 1×20 two-pole multiplexers that are ideal for general purpose switching, including temperature measurements. The two banks can automatically be connected to the Series 3700A mainframe backplane and optional DMM through the analog backplane connection relays. This connection allows the mainframe to reconfigure the 3721 as a single 1×40 two-pole multiplexer or to enable card-to-card expansion for even larger configurations.

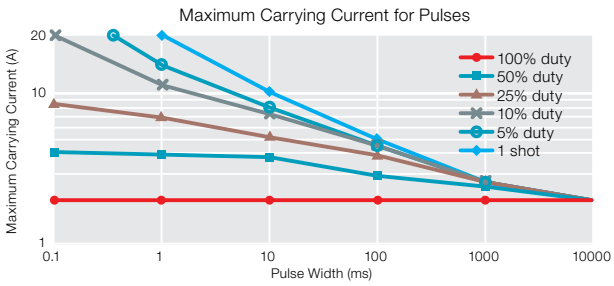

1. 3706A ambient temperature <28°C.
2. One shot repetition rate > 10 seconds.
3. Signal path routed only through one card (not through backplane).
4. Only one channel closed at a time.
5. Contact life specification unaffected if pulse width and carry current are not exceeded.

Key Features

- 40 two-pole or 20 four-pole channels for general purpose switching
- 2 dedicated channels for current measurements, 3 A capacity
- Automatic CJC for temperature measurements when used with 3721-ST accessory
- 4-wire common side ohms input supports 40 channels of 4-wire ohms measurements
- Analog backplane connection relays provide easy bank and card interconnections
- 300 V, 2 A switched or 3 A carry signal capacity; 60 Ω, 125 VA
- Latching electromechanical relays

The 3721 provides a number of other features. In addition to the 40 channels, two fused channels are supplied for current measurements. Also, the 3721 includes dedicated inputs that enable 40 channels of four-wire common side ohms measurements. For thermocouple type measurements, automatic cold junction compensation (CJC) is supported when used with the 3721-ST (screw terminal) accessory.

The 3721 uses two 50-pin male D-sub connectors for signal connections. For screw terminal or automatic CJC, use the detachable 3721-ST accessory.

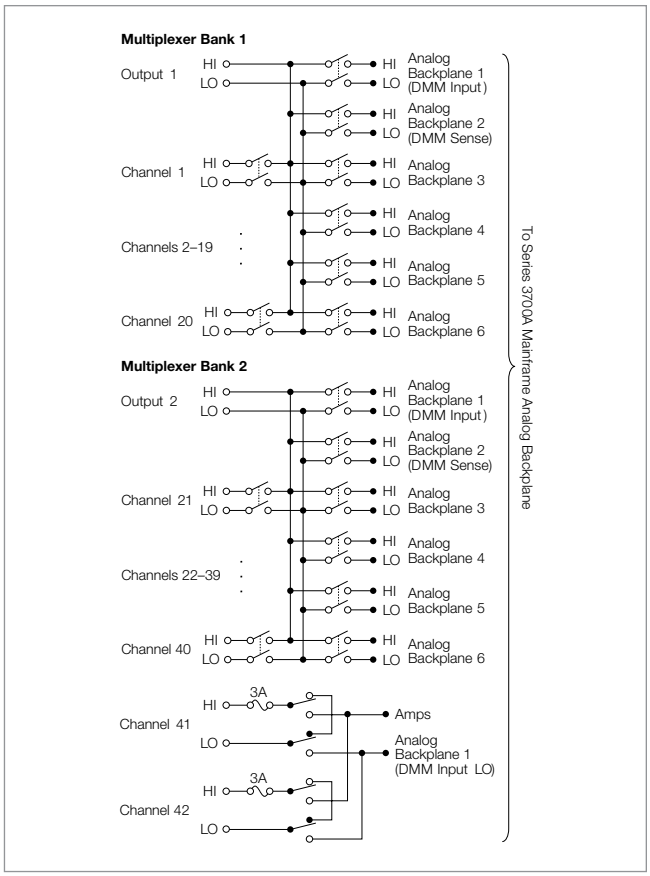

Two-pole mode

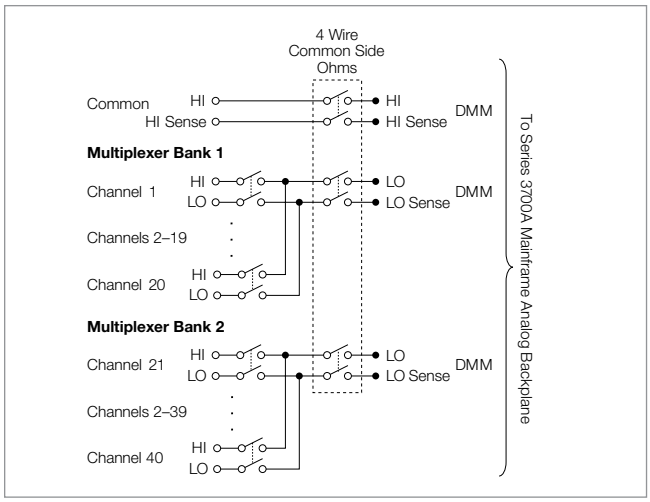

Four-wire common side ohm mode

Specifications

Multiplexer Configuration	Two independent 1×20 2-pole multiplexers. Banks can be connected together via relay creating a single 1×40 multiplexer. Banks can be isolated from the backplane by relays. Card can be configured for common side Ohms measurement via backplane relays. **Channel 41–42:** Multiplex one of two 2-pole current signals into DMM.
Contact Configuration	2-pole form A.
Connector Type	Two 50-pin male D-shells. Removable screw terminal option.
Maximum Signal Level	**Channels 1–40:** 300 V DC or RMS, 2 A switched (3 A carry), 60 Ω, 125 VA maximum. **Channels 41–42:** 60 V DC or 30V rms, 3 A switched, 60 Ω, 125 VA maximum. Fused 3 A, 250 V rms.
Common Mode Voltage	**Channels 1–40:** 300V DC or rms between any terminal and chassis.
Volt-Hertz Limit	8×10^7.
Contact Life	$>10^5$ operations at maximum signal level. $>10^8$ operations no load.[1]
Typical Scanning Speeds	
Switch Only[4]	**Sequential scanning, single channel, immediate trigger advance** >120 ch/s.
With Measurements Into Memory[5]	
DCV (10 V range) or 2W Ohms (1 kΩ range)	>110 ch/s.
Thermocouple	>110 ch/s.
3- or 4-Wire RTD	>100 ch/s.
4-Wire Ohms (1 kΩ range)	>100 ch/s.
ACV (10 V, 400 Hz range) or ACI (1 A, 400 Hz range)	>110 ch/s.

		Dual 1×20 [3]	Single 1×40 [2, 3]
Channel Resistance (end of contact life)		<1.0 Ω	<1.5 Ω
Contact Potential (differential)		<±1 µV	<±3 µV
Offset Current		<±250 pA	<±250 pA
Isolation	Differential	10^9 Ω, 280 pF	10^9 Ω, 530 pF
	Bank-Bank	10^{11} Ω, 60 pF	—
	Channel-channel	10^9 Ω, 50 pF	10^9 Ω, 50 pF
	Common Mode	10^9 Ω, 180 pF	10^9 Ω, 480 pF
Crosstalk Channel-Channel	300 kHz	<–60 dB	<–60 dB
	1 MHz	<–50 dB	<–50 dB
	20 MHz	<–25 dB	<–15 dB
Bandwidth		28 MHz	9 MHz

Notes

1. Open detector enabled during thermocouple measurements. Minimum signal level 10 mV, 10 µA.
2. 3706A mainframe with all DMM backplane relays disconnected. Maximum two card backplane relays closed.
3. Connections made using 3721-ST accessory.
4. Scanning script local to 3706A mainframe, within same bank, and break before make switching.
5. 3706A mainframe with autorange off, limits off, dmm.autozero=0, dmm.autodelay=0, 4½ digits (NPLC=0.006), for ACV dmm.detectorbandwidth=300, for OHMs dmm. offsetcompensation=off, dmm.opendetector=off. Scanning script local to mainframe, sequential scan within same bank (2-pole) or card (4-pole), and break before make switching.

General

Actuation Time	4 ms.
Temperature Accuracy using Automatic CJC with 3721-ST Accessory	1°C for J, K, T, and E types (see mainframe specification for details).
Relay Type	Latching electromechanical.
Relay Drive Scheme	Direct.
Interlock	Backplane relays disabled when interlock connection is removed.
Operating Environment	Specified for 0° to 50°C. Specified to 70% R.H. at 35°C.
Storage Environment	–25° to 65°C.
Weight	2.25 lbs.
Safety	Conforms to European Union Directive 73/23/EEC, EN61010-1.
EMC	Conforms to European Union Directive 2004/108/EC, EN61326-1.

Ordering Information

3721	Dual 1×20 Multiplexer Card

Available Accessories

3721-MTC-3	50-pin D-sub Female to Male Cable, 3 m (10 ft.)
3721-ST	Screw Terminal Block (required for auto CJC thermocouple measurements)
7401	Type K Thermocouple Wire (100 ft.)

Available Services

3721-3Y-EW-STD	1-year factory warranty extended to 3 years from date of shipment
3721-5Y-EW-STD	1-year factory warranty extended to 5 years from date of shipment
C/3721-3Y-STD	3 (Z540-1 compliant) calibrations within 3 years of purchase*

*Not available in all countries

3722 Dual 1x48, High Density, Multiplexer Card

96 differential channels, 300 Volts/1 Amp

The 3722 offers two independent banks of 1×48 two-pole multiplexers, which is ideal for applications that require a high channel count. The two banks can automatically be connected to the Series 3700A mainframe backplane and optional DMM through the analog backplane connection relays. This connection allows the mainframe to reconfigure the card as a single 1×96 two-pole multiplexer or to enable card-to-card expansion for even larger configurations. Another feature of this card is the latching electromechanical relays. They can accommodate 300 V, 1 A switched signal levels.

Key Features

- 96 two-pole or 48 four-pole channels for general purpose measurements
- Analog backplane connection relays provide easy bank and card interconnections
- 300 V, 1 A switched or 2 A carry signal capacity; 60 Ω, 125VA
- 1 µV and 100 pA offsets
- 25 MHz bandwidth
- Relay closures stored in onboard memory
- Latching electromechanical relays
- Scan and measure over 110 channels/second

The 3722 uses two 104-pin D-sub connectors for signal connections. A solder style connector kit (3792-KIT104-R) and pre-assembled cables (3722-MTC-1.5 and 3722-MTC-3) are available for card connections.

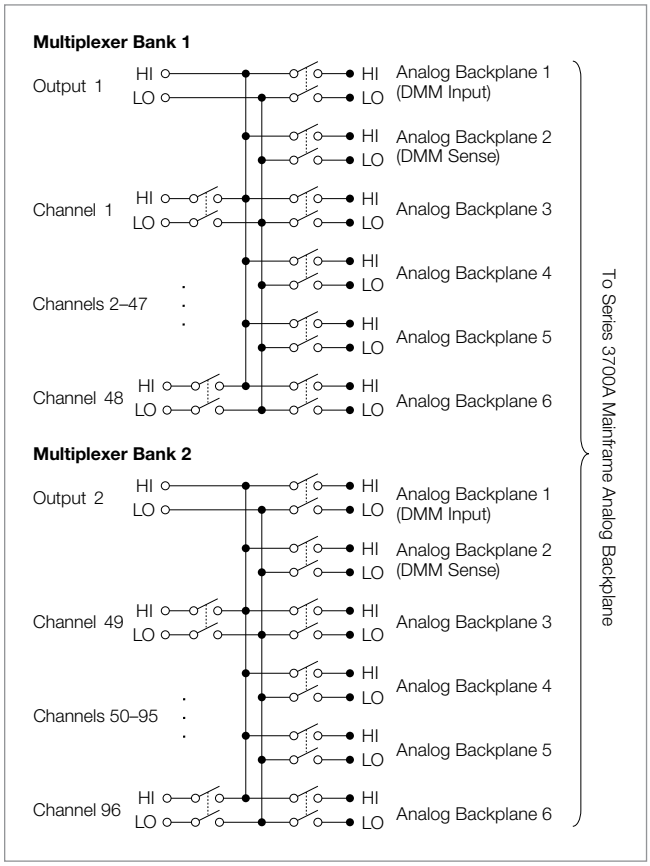

Tektronix®

Specifications

Multiplexer Configuration
Two independent 1×48 2-pole multiplexers. Banks can be connected together via relays creating a single 1×96 multiplexer. Banks can be isolated from the backplane by relays. Card can be configured for 2- and 4-wire mode.

Contact Configuration
2-pole form A.

Connector Type
Two 104-pin female D-shells.

Maximum Signal Level
300 V DC or RMS, 1 A switched (2 A carry), 60 Ω, 125 VA.

Common Mode Voltage
300 V DC or RMS between any terminal and chassis.

Volt-Hertz Limit
8×10^7.

Contact Life
$>10^5$ operations at maximum signal level. $>10^8$ operations no load.[1]

		Dual 1×48 [2]	Single 1×96
Channel Resistance (end of contact life)		<1.5 Ω	<2.5 Ω
Contact Potential (differential)		<±1 µV	<± 2 µV
Offset Current		<100 pA	<100 pA
Isolation	Differential	5×10^9 Ω, 200 pF	5×10^9 Ω, 400 pF
	Bank-Bank	10^9 Ω, 50 pF	—
	Channel-Channel	10^9 Ω, 50 pF	10^9 Ω, 50 pF
	Common Mode	10^{10} Ω, 200 pF	10^{10} Ω, 400 pF
Crosstalk Channel-channel	300 kHz	<–65 dB	<–65 dB
	1 MHz	<–55 dB	<–55 dB
	20 MHz	<–30 dB	<–30 dB
	Bandwidth	25 MHz	15 MHz

Typical Scanning Speeds

Switch Only [3]
Sequential scanning, single channel, immediate trigger advance >120 ch/s.

With Measurements Into Memory [4]

DCV (10 V range) or 2W Ohms (1 kΩ range)
>110 ch/s.

3- or 4-Wire RTD
>100 ch/s.

4-Wire Ohms (1 kΩ range)
>100 ch/s.

ACV (10 V, 400 Hz range)
>110 ch/s.

Notes

1. Minimum signal level 10 mV, 10 µA.
2. 3706A mainframe with all DMM backplane relays disconnected. Maximum two card backplane relays closed.
3. Scanning script local to 3706A mainframe, within same bank, and break before make switching.
4. 3706A mainframe with autorange off, limits off, dmm.autozero=0, dmm.autodelay=0, 4½ digits (NPLC=.006), for ACV dmm.detectorbandwidth=300, for OHMs dmm.offsetcompensation=off. Scanning script local to mainframe, sequential scan within same bank (2-pole) or card (4-pole), and break before make switching.

General

ACTUATION TIME	4 ms.
RELAY TYPE	Latching electromechanical.
RELAY DRIVE SCHEME	Matrix.
OPERATING ENVIRONMENT	Specified for 0° to 50°C. Specified to 70% R.H. at 35°C.
STORAGE ENVIRONMENT	–25° to 65°C.
WEIGHT	2.5 lbs.
SAFETY	Conforms to European Union Directive 73/23/EEC, EN61010-1.
EMC	Conforms to European Union Directive 2004/108/EC, EN61326-1.

Ordering Information

3722	Dual 1×48, High Density, Multiplexer Card

Available Accessories

3722-MTC-1.5	104-pin D-sub Male to Female Cable, 1.5 m (5 ft.)
3722-MTC-3	104-pin D-sub Male to Female Cable, 3 m (10 ft.)

Available Services

3722-3Y-EW-STD	1-year factory warranty extended to 3 years from date of shipment
3722-5Y-EW-STD	1-year factory warranty extended to 5 years from date of shipment
C/3722-3Y-STD	3 (Z540-1 compliant) calibrations within 3 years of purchase*

*Not available in all countries

3723 Dual 1×30, High Speed, Multiplexer Card

60 differential channels, long life reed relays

The 3723 offers two independent banks of high speed 1×30 two-pole multiplexers that are ideal for high speed scanning applications. The two banks can automatically be connected to the Series 3700A mainframe backplane and optional DMM through the analog backplane connection relays. This connection allows the mainframe to reconfigure the 3723 as a single 1×60 two-pole multiplexer or as a single 1×120 single-pole multiplexer. It also enables card-to-card expansion for even larger configurations.

Key Features

- 60 two-pole or 30 four-pole channels for high speed scanning
- 120 channel single-pole mode for one-wire (common side) measurements
- Analog backplane connection relays provide easy bank and card interconnections
- 200 V, 1 A switched or 1.25 A carry signal capacity; 15 W
- Relay actuation time <0.5 ms
- 20 MHz bandwidth
- Ideal for multi-channel I-V testing with Series 2600B SourceMeter® SMU instruments
- Long life dry reed relays (>10^9 operations)

By using high speed reed relays with actuation times of less than 0.5ms, this card can meet demanding throughput applications. Another feature of the 3723 is its single-ended, one-pole mode, which supports up to 120 channels of single-wire measurements.

The 3723 uses two 78-pin D-sub connectors for signal connections. For screw terminal connections, use the 3723-ST for two- and four-pole configurations.

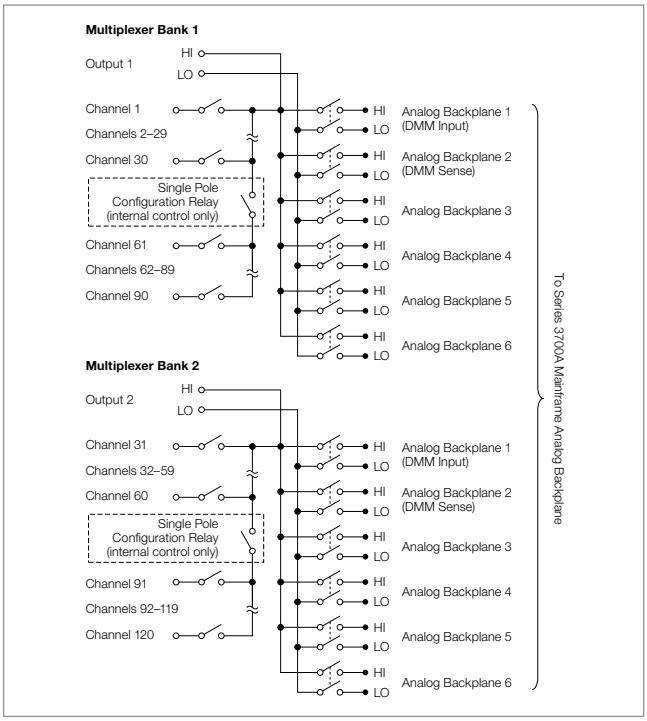

Single-pole mode

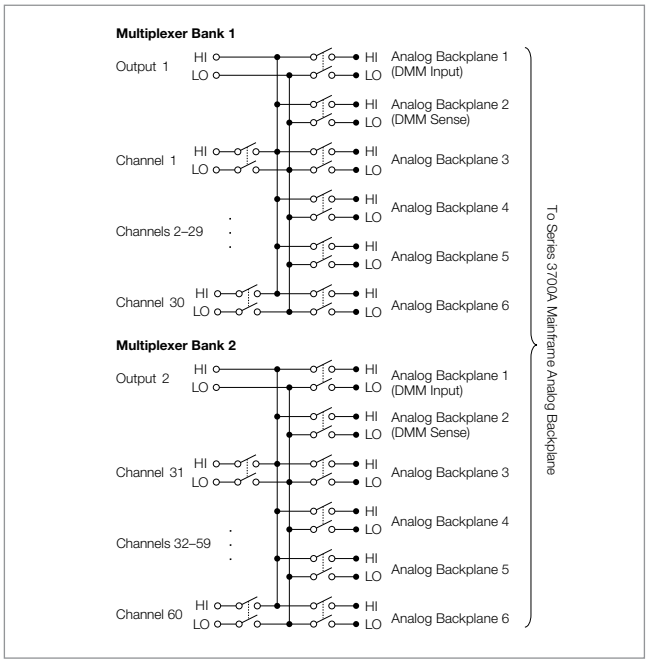

Two-pole mode

Tektronix®

Specifications

Multiplexer Configuration	Two independent 1×30 2-pole multiplexers. Banks can be connected together via relay creating a single 1×60 multiplexer. Banks can be isolated from the backplane by relays. Card can be configured for 1-, 2-, and 4-wire.
Contact Configuration	2-pole form A.
Connector Type	Two 78-pin male D-shells.
3723-ST Screw Terminal Option	#22 AWG typical wire size with 0.062 inch O.D. 124 conductors maximum. #16 AWG maximum wire size with 0.092 inch O.D. 36 conductor per card maximum.
Maximum Signal Level	200 V DC or RMS, 1 A switched (1.25 A carry), 15 W.
Common Mode Voltage	300 V DC or RMS between any terminal and chassis.
Volt-Hertz Limit	8×10^7.
Contact Life	**Reed:** $>10^9$ operations, no load. 10^7 operations @100 V, 10 mA. **EMR:** $>10^8$ operations @ 5 V, 10 mA. 10^5 operations @ maximuum signal level.

		Dual 1×30 [1]	Single 1×60 [1, 2]
Channel Resistance (end of contact life)		<1.5 Ω	<2.0 Ω
Contact Potential	Single-Ended	<±6 µV	<±6 µV
	Differential	<±12 µV	<±12 µV
Offset Current		<250 pA	<250 pA
Isolation	Differential	10^{10} Ω, 260 pF	10^{10} Ω, 500 pF
	Bank-Bank	10^{10} Ω, 75 pF	—
	Channel-channel	10^{10} Ω, 75 pF	10^{10} Ω, 75 pF
	Common Mode	10^{10} Ω, 280 pF	10^9 Ω, 625 pF
Crosstalk Channel-channel	300 kHz	<–55 dB	<–55 dB
	1 MHz	<–50 dB	<–45 dB
	20 MHz	<–20 dB	<–20 dB
Bandwidth		20 MHz	10 MHz

Typical Scanning Speeds:

Switch Only [3] — **Sequential scanning, single channel, immediate trigger advance:** >1000 ch/s.

With Measurements Into Memory [4]

DCV (10 V range) or 2W Ohms (1 kΩ range)
>800 ch/s.

3- or 4-Wire RTD >450 ch/s.

4-Wire Ohms (1 kΩ range)
>450 ch/s.

ACV (10 V, 400 Hz range)
>800 ch/s.

Notes

1. Connections made using 3723-ST accessory.
2. 3706A mainframe with all DMM backplane relays disconnected. Maximum two card backplane relays closed.
3. Scanning script local to 3706A mainframe, within same bank, and break before make switching.
4. 3706A mainframe with autorange off, limits off, dmm.autozero=0, dmm.autodelay=0, 4½ digits (NPLC=0.006), for ACV dmm.detectorbandwidth=300, for OHMs dmm.offsetcompensation=off. Scanning script local to mainframe, sequential scan within same bank (2-pole) or card (4-pole), and break before make switching.

General

Actuation Time	<0.5 ms.
Relay Type	Dry reed.
Relay Drive Scheme	Direct.
Relay Drive Current	10 mA.
Interlock	Backplane relays disabled when interlock connection is removed.
Operating Environment	Specified for 0° to 50°C. Specified to 70% R.H. at 35°C.
Storage Environment	–25° to 65°C.
Weight	3.0 lbs.
Safety	Conforms to European Union Directive 73/23/EEC, EN61010-1.
EMC	Conforms to European Union Directive 2004/108/EC, EN61326-1.

Ordering Information

3723	Dual 1×30, High Speed, Reed Relay, Multiplexer Card

Available Accessories

3720-MTC-3	78-pin D-sub Female to Male Cable, 3 m (10 ft.)
3723-ST	Screw Terminal Block

Available Services

3723-3Y-EW-STD	1-year factory warranty extended to 3 years from date of shipment
3723-5Y-EW-STD	1-year factory warranty extended to 5 years from date of shipment
C/3723-3Y-STD	3 (Z540-1 compliant) calibrations within 3 years of purchase*

*Not available in all countries

3724 Dual 1×30 FET Multiplexer Card

60 differential channels, automatic CJC with 3724-ST accessory

The 3724 provides two independent banks of solid-state relays arranged as 1×30 two-pole multiplexers that are ideal for high reliability, high speed multipoint measurement applications including temperature. The two banks can automatically be connected to the Series 3700A mainframe backplane and optional DMM through the analog backplane connection relays. This connection allows the mainframe to reconfigure the card to a single 1×60 two-pole multiplexer or to enable card-to-card expansion for even larger configurations.

The solid-state FET relay technology supports fast switching times with scanning rates of greater than 1250 channels/second and provides unlimited contact life. In addition, the 3724 supports thermocouple temperature measurements when used with the 3724-ST (screw terminal) accessory providing automatic cold junction compensation (CJC).

The 3724 uses two 78-pin male D-sub connectors for signal connections. For screw terminal or automatic CJC, use the detachable 3724-ST accessory.

Key Features

- 60 two-pole or 30 four-pole solid-state channels
- Scanning speeds greater than 1250 channels/second (switch only)
- Optically isolated, solid-state FET relays provide unlimited contact life
- 200 V, 0.1 A switch/carry signal capacity; 800 mW
- Automatic CJC for temperature measurements when used with 3724-ST accessory
- Analog backplane connection relays provide easy bank and card interconnections
- Screw terminal connections provided with removable 3724-ST accessory
- Ideal for maintenance-free, long-life thermocouple temperature measurements

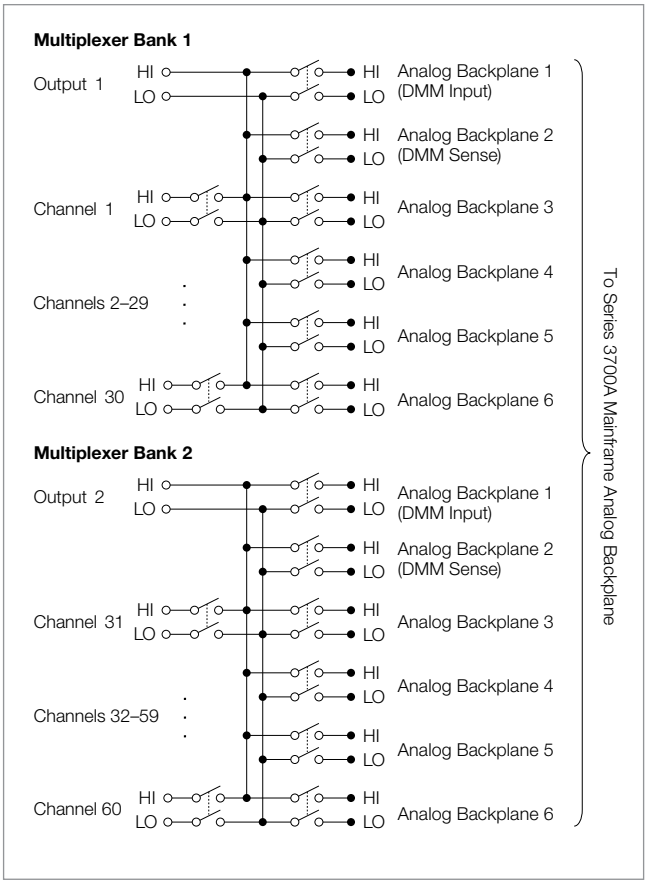

Tektronix®

3724 Specifications

Multiplexer Configuration	Two independent 1×30, 2-pole multiplexers. Banks can be connected together via relay creating a single 1×60 multiplexer. Banks can be isolated from the backplane by relays. Card can be configured for 2- and 4-wire.
Contact Configuration	2-pole form A.
Connector type	Two 78-pin male D-shells.
3724-ST Screw Terminal Option	#22AWG typical wire size with 0.062 inch O.D. 124 conductors maximum. 16 AWG maximum wire size with 0.092 inch O.D. 36 conductor per card maximum.
Maximum Signal Level	200 V DC or 141 V RMS between any terminal, 0.1 A switched (0.1 A carry), 800 mW.
Common Mode Voltage	300V DC or RMS between any terminal and chassis.
Volt-Hertz Limit	10^7.
Contact Life	Solid State: > unlimited. EMR (Backplane): >1×10^8 operations @ 5 V, 10 mA. 1×10^5 operations @ max. signal level.

		Dual 1×30[1]	**Single 1×60[1, 2]**
Channel Resistance		<62 Ω (54 Ω @ 23°C)	<64 Ω (58 Ω @ 23°C)
Contact Potential (differential)		<±2 µV	<±2.5 µV
Offset Current		<10 nA (<±100 pA @ 23°C/60% R.H.)	<10 nA (<±100 pA @ 23°C/60% R.H.)
Isolation	Differential	10^9 Ω, 500 pF	10^9 Ω, 1100 pF
	Bank-Bank	10^9 Ω, 100 pF	—
	CH–CH	10^9 Ω, 125 pF	10^9 Ω, 125 pF
	Common Mode	10^9 Ω, 150 pF	10^9 Ω, 700 pF
Crosstalk CH-CH	300 kHz	–40 dB	–40 dB
	1 MHz	–30 dB	–30 dB
Bandwidth		2 MHz	1 MHz

Notes

1. Connections made using 3724-ST.
2. 3706A mainframe with all DMM backplane relays disconnected. Maximum two card backplane relays closed.

3724 Card/3706A Multimeter Condensed Specifications

Temperature

Displayed in °C, °F, or K. Exclusive of probe errors.
Displayed in °C, °F, or K. Exclusive of probe errors.

Thermocouples (accuracy based on ITS-90)

Type	Range	Resolution	90 Day/1 Year, 23°C ± 5°
J	–150 to +760°C	0.001°C	1.0°C
K	–150 to +1372°C	0.001°C	1.0°C
N	–100 to +1300°C	0.001°C	1.0°C
T	–100 to +400°C	0.001°C	1.0°C
E	–150 to +1000°C	0.001°C	1.0°C
R	+400 to +1768°C	0.1°C	1.8°C
S	+400 to +1768°C	0.1°C	1.8°C
B	+1100 to +1820°C	0.1°C	1.8°C

DC Specifications

3724 Card/3706A Multimeter Uncertainty Specifications

Function	Range	Notes
Voltage	All	Add 4.5 µV to PPM "of range"
Resistance	100 kΩ	Add 8 PPM to "of reading"
Resistance	1 MΩ	Add 80 PPM to "of reading"
Resistance	10 MΩ	Add 250 PPM to "of reading"
Resistance	100 MΩ	Add 5000 PPM to "of reading"
Resistance 2-wire	1 kΩ through 100 MΩ	Add 1.2 Ω (with REL) to PPM "of range" Add 64 Ω (without REL) to PPM "of range"
Resistance 4-wire and Dry Circuit	1 Ω, 10 Ω, and 100 Ω	Ranges Not Available (maximum lead resistance exceeded, see manual for measurement considerations)

Conditions	1 PLC or 5 PLC.
Accuracy	±(ppm of reading + ppm of range) (ppm = parts per million; e.g., 10 ppm = 0.001%).

General

ACTUATION TIME	<0.2 ms.
Temperature Accuracy Using Automatic CJC with 3724-ST Accessory	1°C for J, K, T, and E type (see mainframe specification for details).
Relay Type	Optically isolated FET.
Relay Drive Scheme	Direct.
Interlock	Backplane relays disabled when interlock connection removed.
Relay Drive Current	4 mA.
Operating Environment	Specified for 0°C to 50°C. Specified to 70% R.H. at 35°C.
Storage Environment	–25°C to 65°C.
Weight	1.13 kg (2.5 lbs.).
Safety	Conforms to European Union Directive 73/23/EEC, EN61010-1.
EMC	Conforms to European Union Directive 2004/108/EC, EN61326-1.
Typical Scanning Speeds, Switch Only[1]	Sequential scanning, single channel, immediate trigger advance >1250 ch/s.
Typical Scanning Speeds, With Measurements Into Memory[2]	**DCV (10 V range) or 2WΩ (1 kΩ range)** >1000 ch/s. **Thermocouple** >1000 ch/s. **3- or 4-Wire RTD** >450 ch/s. **4-Wire Ω (1 kΩ range)** >450 ch/s. **ACV (10 V, 400 Hz range)** >1000 ch/s.
Power Budget Information	**Quiescent Power (mW)** 1150. **Channel Relay Power (mW) Each** 20. **Backplane Relay Power Consumption (mW) Each** 100.

See Chapter 8 of the Series 3700A user's manual for more detailed information.

Notes

1. Scanning script local to mainframe, within same bank, break before make.
2. 3706A mainframe with autorange off, limits off, dmm.autodelay=0, dmm.autozero=0, 4½ digits (NPLC=.006), for ACV dmm.detectorbandwidth=300, for OHMs dmm. offsetcompensation=off, dmm.opendetector=off. Scanning script local to mainframe, sequential scan within same bank (2-pole) or card (4-pole), and break before make switching.

Ordering Information

3724	Dual 1×30 FET Multiplexer Card

Available Accessories

3720-MTC-3	78-pin female-to-male D-sub Cable Assembly, 3 m (9.8 ft)
3724-ST	Screw Terminal Block (required for auto CJC thermocouple measurements)

Available Services

3724-3Y-EW-STD	1-year factory warranty extended to 3 years from date of shipment
3724-5Y-EW-STD	1-year factory warranty extended to 5 years from date of shipment
C/3724-3Y-DATA	3 (Z540-1 compliant) calibrations within 3 years of purchase*

*Not available in all countries

3730 6x16, High Density, Matrix Card

96 two-pole crosspoints with column expansion relays

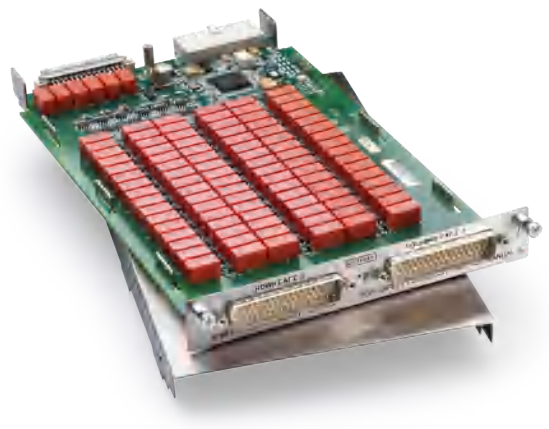

The 3730 is a two-pole, 6 row by 16 column matrix card. It can connect up to six differential instrument channels to any combination of 16 DUTs (devices under test). Any row can be connected to the Series 3700A mainframe backplane by using the analog backplane connection relays. This allows for easy matrix column expansion. A matrix of up to 6 rows by 96 columns can be supported within a single 3706A mainframe (with six 3730 cards).

Key Features

- 6 row by 16 column matrix (2-pole)
- Analog backplane connection relays provide easy column expansion
- 300 V, 1 A switched or 2 A carry signal capacity; 60 Ω, 125 VA
- Screw terminal connections provided on removable 3730-ST accessory
- 2 μV and 100 pA offsets
- Relay closures stored in onboard memory
- Latching electromechanical relays

The 3730 uses two 50-pin male D-sub connectors for signal connections. For screw terminal connections, use the detachable 3730-ST accessory.

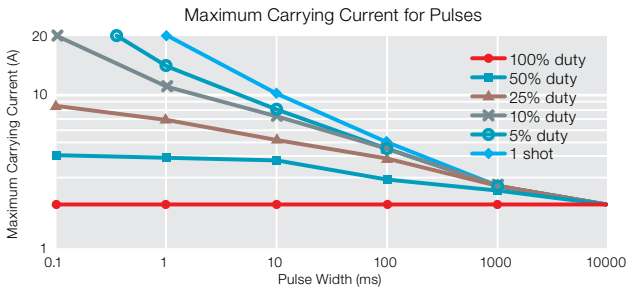

1. 3706A ambient temperature <28°C.
2. One shot repetition rate > 10 seconds.
3. Signal path routed only through one card (not through backplane).
4. Only one channel closed at a time.
5. Contact life specification unaffected if pulse width and carry current are not exceeded.

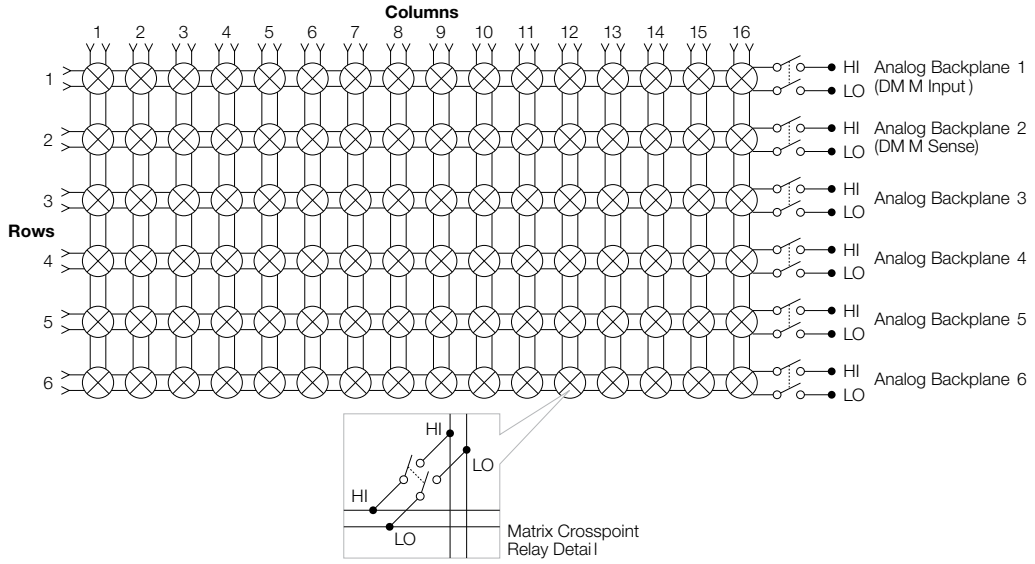

Tektronix®

Specifications

Matrix Configuration	6 row by 16 column matrix. Columns can be expanded using the backplane or isolated by relays.
Contact Configuration	2-pole form A.
Connector Type	Two 50-pin male D-shells.
3730-ST Screw Terminal Option	#22 AWG typical wire size with 0.062 inch O.D. 88 conductors maximum. #16 AWG maximum wire size with 0.092 inch O.D. 44 conductor per card maximum.
Maximum Signal Level	300 V DC or RMS, 1 A switched (2 A carry), 60 Ω, 125 VA.
Common Mode Voltage	300 V DC or RMS between any terminal and chassis.
Volt-Hertz Limit	8×10^7.
Contact Life	$>10^5$ operations @ maximuum signal level. $>10^8$ operations no load.[1]

		6×16 [2, 3]
Channel Resistance (end of contact life)		<1.0 Ω
Contact Potential (differential)		<±2 µV
Offset Current		<±100 pA
Isolation	Differential	10^{10} Ω, 250 pF
	Channel-channel	10^{10} Ω, 75 pF
	Common Mode	10^{10} Ω, 150 pF
Crosstalk Channel-Channel	300 kHz	<–65 dB
	1 MHz	<–55 dB
	20 MHz	<–30 dB
Bandwidth		27 MHz

Notes

1. Minimum signal level 10mV, 10µA.
2. Connections made using 3730-ST accessory.
3. 3706A mainframe with all DMM backplane relays disconnected.

General

Actuation Time	4 ms.
Relay Type	Latching electromechanical.
Relay Drive Scheme	Hybrid Matrix.
Interlock	Backplane relays disabled when terminal assembly is removed.
Operating Environment	Specified for 0° to 50°C. Specified to 70% R.H. at 35°C.
Storage Environment	–25° to 65°C.
Weight	2.5 lbs.
Safety	Conforms to European Union Directive 73/23/EEC, EN61010-1.
EMC	Conforms to European Union Directive 2004/108/EC, EN61326-1.

Ordering Information

3730	6×16, High Density, Matrix Card

Available Accessories

3721-MTC-3	50-pin D-sub Female to Male Cable, 3 m (10 ft.)
3730-ST	Screw Terminal Block

Available Services

3730-3Y-EW-STD	1-year factory warranty extended to 3 years from date of shipment
3730-5Y-EW-STD	1-year factory warranty extended to 5 years from date of shipment
C/3730-3Y-STD	3 (Z540-1 compliant) calibrations within 3 years of purchase*

*Not available in all countries

3731 6x16 High Speed, Reed Relay, Matrix Card

96 two-pole crosspoints with column expansion relays

The 3731 is a two-pole, 6 row by 16 column reed relay matrix card. By using high speed reed relays with actuation times of 0.5 ms, this card meets the requirements of demanding throughput applications while offering users the additional benefit of long life, exceeding one billion operations. The card can connect up to six differential instrument channels to any combination of 16 DUTs (devices under test). Any row can be connected to the Series 3700A mainframe backplane by using the analog backplane connection relays. This allows for easy matrix column expansion. A matrix of up to 6 rows by 96 columns can be supported within a single 3706A mainframe (with six 3731 cards).

Key Features

- 6 row by 16 column matrix (2-pole) using high speed, long life reed relays
- Analog backplane connection relays provide easy column expansion
- 200 V, 1 A switched or 2 A carry signal capacity; 10 Ω, 10VA
- Screw terminal connections provided on removable 3731-ST accessory
- Relay actuation time of 0.5 ms
- Ideal for multi-channel I-V testing with Series 2600B Systems
- Long life dry reed relays (>10^9 operations)

The 3731 uses two 50-pin male D-sub connectors for signal connections. For screw terminal connections, use the detachable 3731-ST accessory.

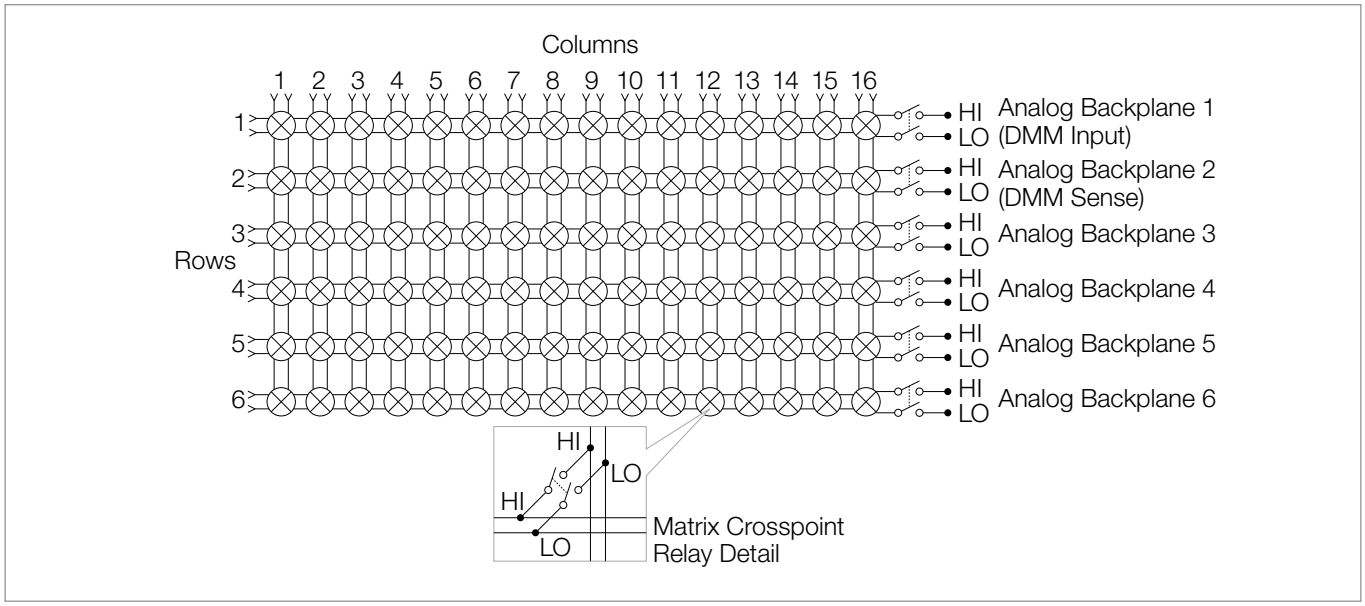

Specifications

Matrix Configuration	6 row by 16 column matrix. Columns can be expanded using the backplane or isolated by relays.
Contact Configuration	2-pole form A.
Connector Type	Two 50-pin male D-shells.
3731-ST Screw Terminal Option	**Typical wire size:** #22 AWG with .062 inch O.D.; 88 conductors maximum **Maximum wire size:** #16 AWG with .092 inch O.D.; 44 conductors per card maximum.
Maximum Signal Level	200 V DC or peak AC, 1 A switched (2 A carry), 10 Ω, 10 VA.
Common Mode Voltage	200 V DC or peak AC between any signal path to a signal path or ground.
Volt-Hertz Limit	8×10^7.
Contact Life	**Reed:** $>10^9$ operations no load. $>8\times10^6$ operations @ 100 V, 10 mA. **EMR (Backplane):** $>10^8$ operations @ 5 V, 10 mA and 105 operations @ maximum signal level.

		6×16 [1, 2]
Channel Resistance (end of contact life)		<1.5 Ω
Contact Potential (differential)		<±80 µV
Offset Current		<±500 pA
Isolation	Differential	3×10^9 Ω, 300 pF
	Channel-channel	3×10^9 Ω, 100 pF
	Common Mode	3×10^9 Ω, 150 pF
Crosstalk Channel-Channel	300 kHz	<–60 dB
	1 MHz	<–50 dB
	15 MHz	<–20 dB
Bandwidth		19 MHz

Notes

1. Connections made using 3731-ST.
2. 3706A mainframe with all DMM backplane relays disconnected.

General

Actuation Time	0.5 ms.
Relay Type	Reed.
Relay Drive Scheme	Direct drive.
Interlock	Backplane relays disabled when terminal assembly is removed.
Operating Environment	Specified for 0° to 50°C. Specified to 70% R.H. at 35°C.
Storage Environment	–25° to 65°C.
Weight	2.2 lbs.
Safety	Compliant with European Union Low Voltage Directive
EMC	Compliant with European Union EMC Directive 2004/108/EC, EN61326-1.

Ordering Information

3731	6×16 High Speed, Reed Relay, Matrix Card

Available Accessories

3721-MTC-3	50-pin D-sub Female to Male Cable, 3 m (10 ft.)
3731-ST	Screw Terminal Block

Available Services

3731-3Y-EW-STD	1-year factory warranty extended to 3 years from date of shipment
3731-5Y-EW-STD	1-year factory warranty extended to 5 years from date of shipment
C/3731-3Y-STD	3 (Z540-1 compliant) calibrations within 3 years of purchase*

*Not available in all countries

3732 Quad 4×28, Ultra–High Density, Reed Relay Matrix Card

448 one-pole crosspoints with bank configuration and backplane connection relays

The ultra-high density 3732 matrix card is comprised of four banks, each with 4 rows by 28 columns of reed relays. This provides 448 single-pole crosspoints for maximum connection versatility in high channel count applications. For even greater flexibility, bank configuration relays are mounted on the card. They offer an automated method of connecting banks to enable two additional matrix configurations: single 4×112 and dual 4×56. This feature allows the matrix size to be easily adapted to existing or future applications. For differential (2-wire) measurements, a two-pole mode can be selected that enables automatic pairing of crosspoints to create a dual 4×28 or single 4×56 configuration. For larger matrix sizes, analog backplane relays are provided that enable rows to connect to the Series 3700A mainframe backplane. This allows, for example, a matrix of up to 4 rows by 672 columns within a single 3706A mainframe using six 3732 cards.

Key Features

- Four independent banks of 4×28 single-pole matrices
- 200 V, 1.2 A carry or 0.75 A switched signal capacity; 15 W, 15 VA
- Bank configuration relays enable alternative matrix sizes, including:
  - Dual 4×56 (1 wire)
  - Single 4×112 (1 wire)
  - Single 4×56 (2 wire)
- Optional accessory, 3732-ST-R, enables screw terminal access and additional matrix sizes including:
  - Dual 8×28 (1 wire)
  - Single 16×28 (1 wire)
  - Single 8×28 (2 wire)
- Analog backplane connection relays provide easy card-to-card column expansion
- Long life dry reed relays (>10^9 operations)
- Ideal for high channel count I-V testing with Series 2600B Systems

The card uses optimized reed relays that offer both low contact potential and low current offset to minimize the switching errors that often accompany this relay technology. Additionally, these relays provide greater signal voltage (200 V) and current (1.2 A carry) dynamic range while supporting the long life and fast actuation times necessary in many automated test applications.

The 3732 uses two 78-pin male D-sub connectors for signal and configuration connections. For screw terminal connections, two accessories are offered. Use the 3732-ST-R for the 16×28 or dual 8×28 matrix configurations. Use the 3732-ST-C for the 4×112, dual 4×56, or base quad 4×28 matrix configurations.

Quad 4×28 (1-wire) or Dual 4×28 (2-wire) Matrix Configuration

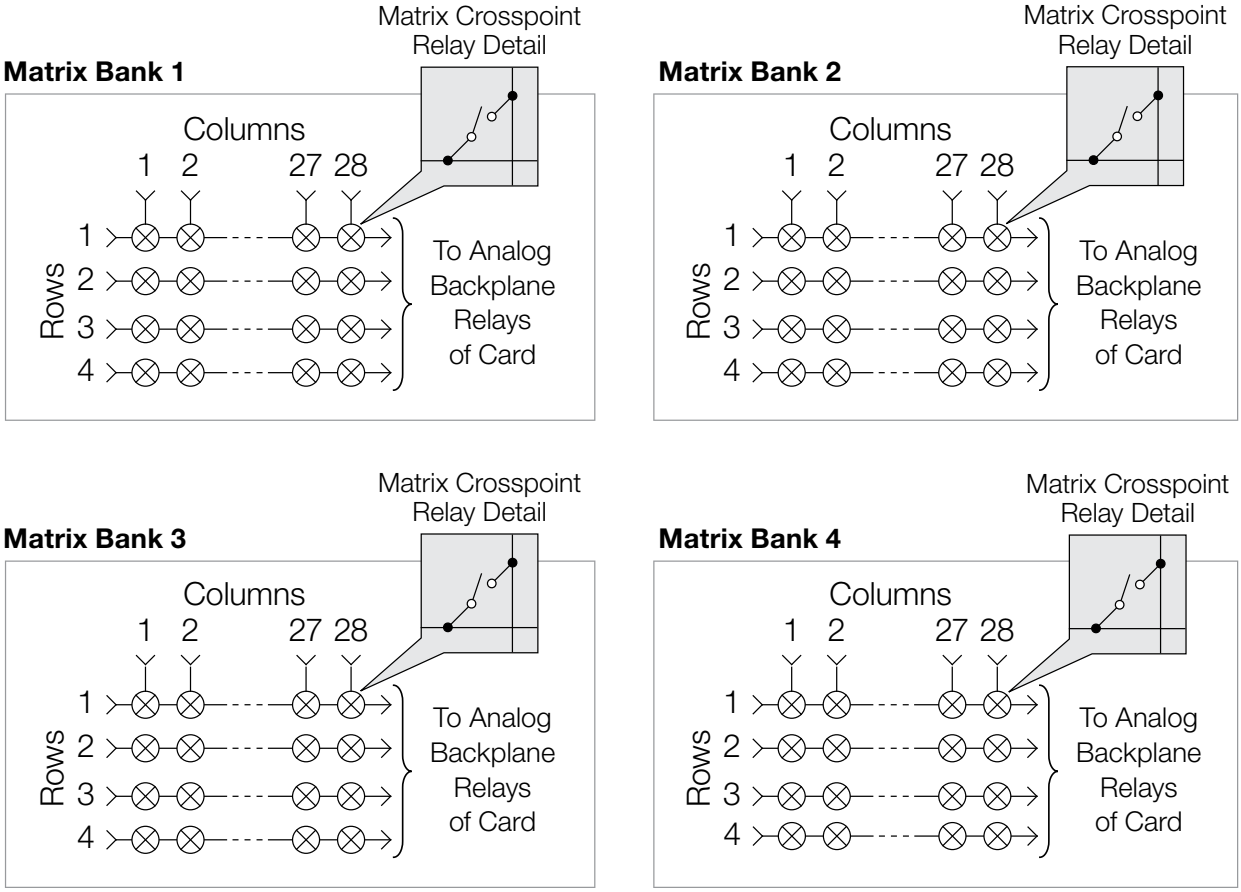

Analog Backplane Connection Relays

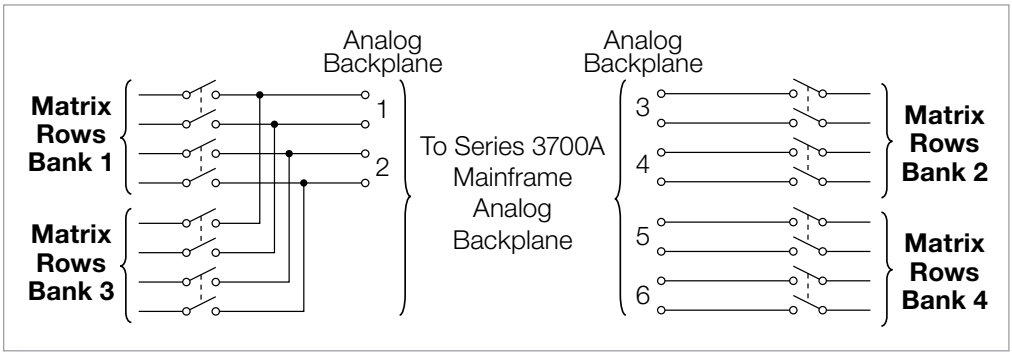

Additional Matrix Configurations Using Bank Configuration Relays

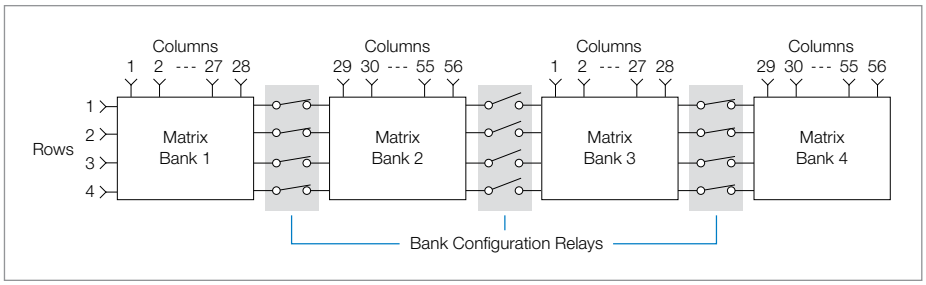

Dual 4×56 (1-wire) or single 4×56 (2-wire) matrix configuration using bank configuration relays

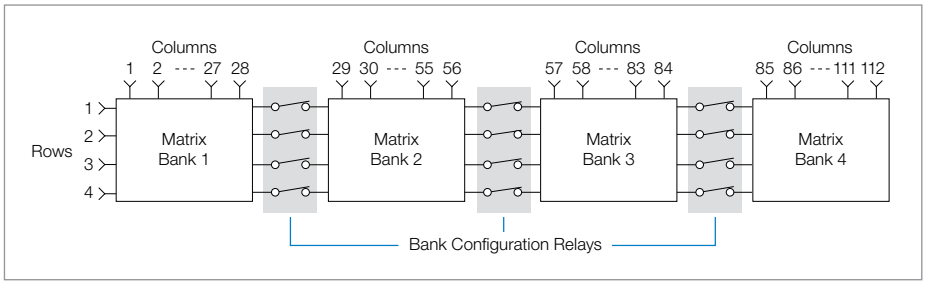

Single 4×112 (1-wire) matrix configuration using bank configuration relays

Additional Matrix Configurations Using the 3732-ST-R Screw Terminal Block

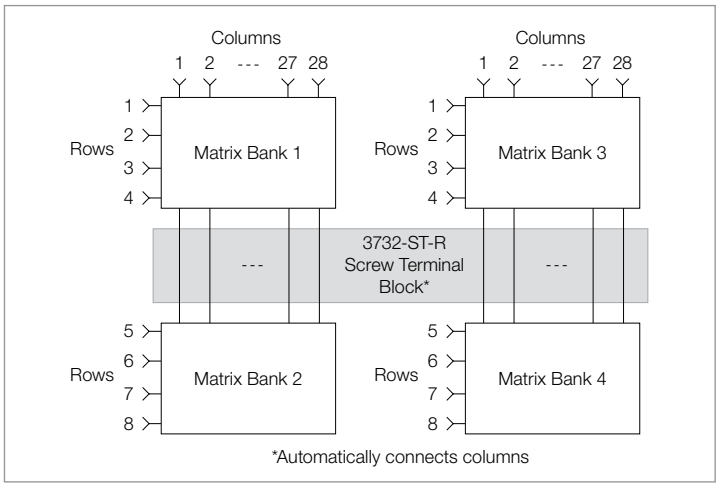

Dual 8×28 (1-wire) or single 8×28 (2-wire) matrix configuration using one 3732-ST-R screw terminal block

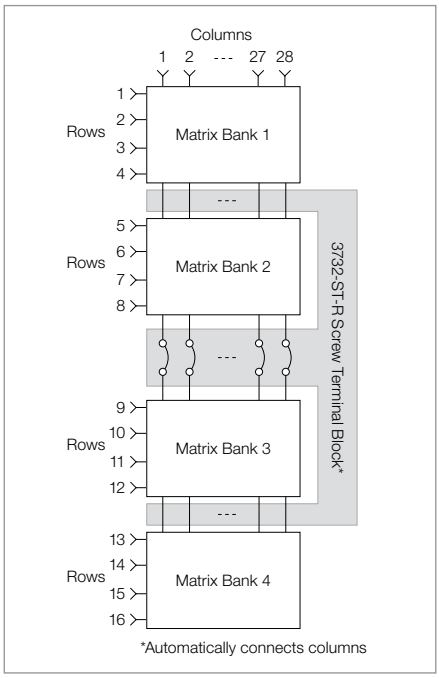

Single 16×28 (1-wire) matrix configuration using one 3732-ST-R screw terminal block

Specifications

Matrix Configuration	Four banks, each with 4 rows by 28 columns of reed relays. Bank configuration and analog backplane relays are included for additional matrix configurations. Banks can be connected together via relays creating dual 4×56 matrices or a single 4×112 matrix. Row expansion is available using optional screw terminal accessories.
Contact Configuration	Single-pole form A.
Connector Type	Two 78-pin male D-shells.
3732-ST-R Screw Terminal Option	Provides terminal block access and column jumper blocks for extended row configurations including Dual 8×28 (1 W), Single 8×28 (2 W), and Single 16×28 (1 W).
Typical Wire Size	#22 AWG with 0.062 inch O.D.; 88 conductors per card maximum.
Maximum Wire Size	#16 AWG with 0.092 inch O.D.; 44 conductors per card maximum.
3732-ST-C Screw Terminal Option	Provides terminal block access for Quad 4×28 (1 W), Dual 4×28 (2 W), Dual 4×56 (1 W), Single 4×56 (2 W), and Single 4×112 (1 W) matrix configurations.
Typical Wire Size	#22 AWG with 0.062 inch O.D.; 88 conductors per card maximum.
Maximum Wire Size	#16 AWG with 0.092 inch O.D.; 44 conductors per card maximum.
Maximum Signal Level	200 VDC or peak AC, 0.75A switched (1.2 A carry), 15 W/15 VA max. switch power.
Common Mode Voltage	200 VDC or peak AC between any signal path to a signal path or ground.
Volt-Hertz Limit	8×10^7.
Contact Life	**Reed:** $>10^9$ operations no load, $>8\times10^6$ operations @ 100 V, 10 mA.
EMR (Backplane)	$>10^8$ operations @ 5 V, 10 mA and 10^5 operations at maximum signal level.

3732 Parameters

Parameter		Quad 4×28 [1, 2]	Dual 4×56 [1, 2]	Single 4×112 [1, 2]	Dual 8×28 [2, 3]	Single 16×28 [2, 3]
Channel Resistance (end of life)		<1.5 Ω	<2.0 Ω	<2.5 Ω	<1.6 Ω	<2.0 Ω
Contact Potential (differential)		<±10 µV	<±20 µV	N/A	<±15 µV	N/A
Contact Potential (single ended)		<±20 µV	<±40 µV	<±65 µV	<± 20 µV	<±20 µV
Offset Current		<±0.5 nA	<±1.0 nA	<±2.0 nA	<±1.0 nA	<±2.0 nA
Isolation	CH-CH	3×10^9 Ω/150 pF	1.5×10^9 Ω/300 pF	7.5×10^8 Ω/600 pF	2×10^9 Ω/200 pF	1.5×10^9 Ω/300 pF
	Common mode	1.5×10^9 Ω/300 pF	1.5×10^9 Ω/300 pF	7.5×10^8 Ω/600 pF	2×10^9 Ω/200 pF	1.5×10^9 Ω/300 pF
Crosstalk Ch-Ch	300 kHz	<–37 dB	<–37 dB	<–37 dB	<–37 dB	<–37 dB
	1 MHz	<–26 dB	<–26 dB	<–26 dB	<–26 dB	<–26 dB
	15 MHz	< –7 dB	< –7 dB	< –7 dB	< –7 dB	< –7 dB
Bandwidth		15 MHz	15 MHz	10 MHz	15 MHz	15 MHz

Notes

1. Connections made using 3732-ST-C.
2. 3706A mainframe with all DMM backplane relays disconnected.
3. Connections made using 3732-ST-R.

General

Power Budget Information

Quiescent Power Usage

Mode	Quiescent Power
Quad 4×28	780 mW
Dual 4×56	916 mW
Single 4×112	984 mW
Dual 8×28	780 mW
Single 16×28	780 mW

Channel Relay Power Consumption (each) 17 mW.

Backplane Relay Power Consumption (each) 100 mW.

For additional power-budgeting information, refer to the Series 3700A Module Schematics and Connections section in the Series 3700A User's Manual (part no. 3700S-900-01).

Actuation Time	0.6 ms.
Relay Type	Reed (signal relays); EMR (backplane relays)
Relay Drive Scheme	Direct drive.
Relay Drive Current	3.2 mA.
Interlock	Backplane relays disabled when terminal assembly interlock signal removed. When asserted allows system to read and save ID configuration bits.
EMC	Compliant with European Union EMC Directive.
Safety	Compliant with European Union Law Voltage Directive.
Operating Environment	Specified for 0° to 50°C. Specified to 70% relative humidity at 35°C.
Storage Environment	–25° to 65°C.
Weight	3.40 lbs (1.54 kg).

Ordering Information

3732	Quad 4×28, Ultra-High Density, Reed Relay Matrix Card

Available Accessories

3732-ST-C	Screw Terminal Block for matrix configurations: Quad 4×28 (1 wire) Dual 4×28 (2 wire) Single 4×56 (2 wire) Dual 4×56 (1 wire) Single 4×112 (1 wire)
3732-ST-R	Screw Terminal Block for matrix configurations: Dual 8×28 (1 wire) Single 8×28 (2 wire) Single 16×28 (1 wire)

Services Available

3732-3Y-EW-STD	1-year factory warranty extended to 3 years from date of shipment
3732-5Y-EW-STD	1-year factory warranty extended to 5 years from date of shipment
C/3732-3Y-STD	3 (Z540-1 compliant) calibrations within 3 years of purchase*

*Not available in all countries

3740 32–channel Isolated Switch Card

28 Form C relays and 4 high power Form A relays

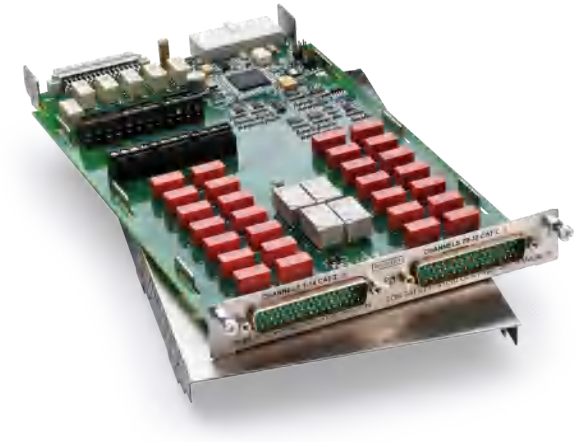

The 3740 offers 28 general-purpose form C channels that are ideal for routing power or other control devices. For higher power applications of up to 7 A, four additional high current form A channels are provided.

If any general purpose signal requires routing to the Series 3700A mainframe backplane, terminal blocks are located on the card, which are enabled with jumpers. Custom configurations can be created with the user accessible terminal blocks. For additional protection, an onboard temperature sensor will notify the mainframe when the card's operating temperature exceeds 70°C, compromising system specifications.

Key Features

- 28 general purpose Form C relays rated for 300 V, 2 A switched or 3 A carry signal capacity; 60 Ω, 125 VA
- 4 high current Form A relays rated for 250 VAC, 7 A or 30 VDC, 7 A switched capacity; 210 Ω
- Analog backplane connection relays provided for user interconnections
- Screw terminal connections provided on removable 3740-ST accessory
- Relay closures stored in onboard memory
- Latching electromechanical relays

The 3740 uses two 50-pin male D-sub connectors for signal connections. For screw terminal connections, use the detachable 3740-ST accessory.

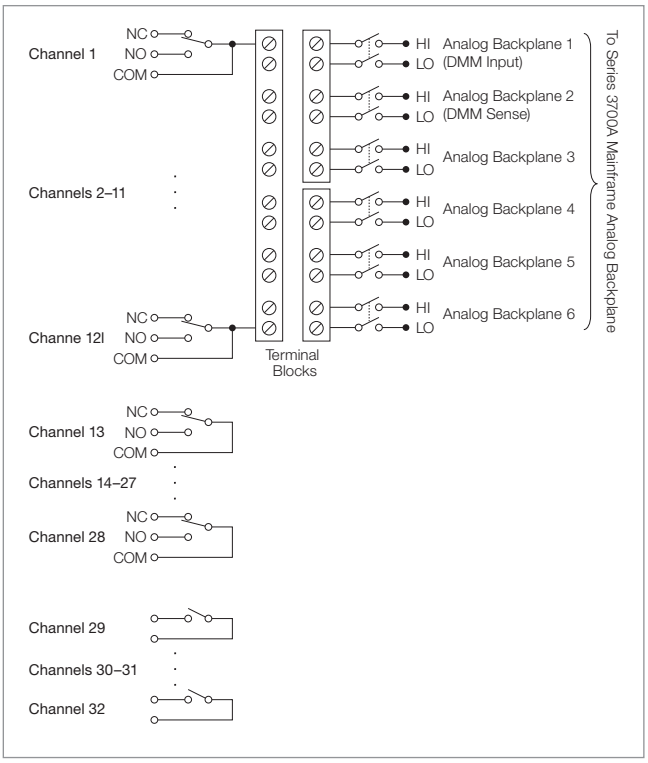

Specifications

Relay Switch Configuration	32 general purpose independent channels. 28 channels of Form C switching at 2A and 4 channels of Form A switching at 7 A. Relays can be connected to each other and backplane via removable terminal blocks.
Contact Configuration	**General Purpose:** 1-pole Form C. **High Current:** 1-pole Form A.
Connector Type	Two 50-pin male D-shells.
3740-ST Screw Terminal Option	#22 AWG typical wire size with 0.062 inch O.D. 84 conductors maximum. #16 AWG maximum wire size with 0.092 inch O.D. 44 conductors per card maximum.
Maximum Signal Level	**Form C:** 300 V DC or RMS, 2 A switched (3 A carry), 60 Ω, 125 VA. **Form A:** 250 VAC 7 A, 30 VDC 7 A, 210 Ω.
Common Mode Voltage	300 V DC or RMS between any terminal and chassis.
Volt-Hertz Limit	8×10^7.
Contact Life	**Form C:** $>10^5$ operations at maximum signal level. $>10^8$ operations no load.[1] **Form A:** $>10^5$ operations at maximum signal level, $>5\times10^7$ operations no load.[1]
Channel Resistance (end of contact life)	<0.5 Ω.
Contact Potential	<±3 µV typical per contact.
Isolation	**Channel-channel:** 10^9 Ω, <200 pF. **Common Mode:** $>10^{10}$ Ω, <150 pF.
Crosstalk (Channel-channel, 50 Ω load–50 Ω source)	**100 kHz:** <–50dB. **1 MHz:** <–35dB. **1 MHz:** <–15dB.
Bandwidth	30 MHz.

Notes

1. Minimum signal level 10 mV, 10 µA.

General

Over-Temperature	Temperature sensor indicates over temperature.
Actuation Time	**Form C:** 4 ms. **Form A:** 10 ms.
Relay Type	**Form C:** Latching electromechanical. **Form A:** Nonlatching electromechanical.
Relay Drive Scheme	Direct.
Interlock	Backplane relays disabled when interlock connection is removed.
Operating Environment	Specified for 0° to 50 °C. Specified to 70% R.H. at 35°C.
Storage Environment	–25° to 65 °C.
Weight	2.5 lbs.
Safety	Conforms to European Union Directive 73/23/EEC, EN61010-1.
EMC	Conforms to European Union Directive 2004/108/EC, EN61326-1.

Ordering Information

3740	General Purpose Card with 32 Independent Channels

Accessories Available

3721-MTC-3	50-pin D-sub Female to Male Cable, 3 m (10 ft.)
3740-ST	Screw Terminal Block

Services Available

3740-3Y-EW-STD	1-year factory warranty extended to 3 years from date of shipment
3740-5Y-EW-STD	1-year factory warranty extended to 5 years from date of shipment
C/3740-3Y-STD	3 (Z540-1 compliant) calibrations within 3 years of purchase*

*Not available in all countries

3760 10–Channel High–Current Multiplexer Card

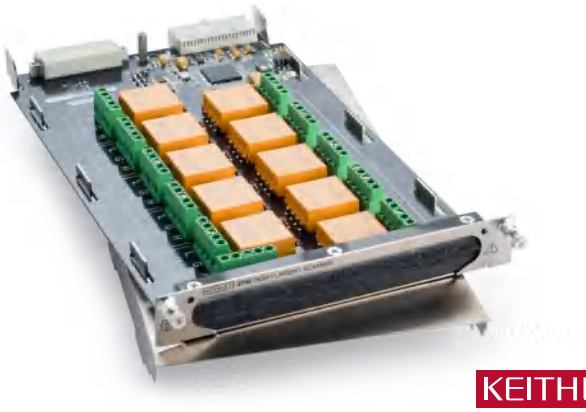

KEITHLEY
A Tektronix Company

The 3760 has ten 2-pole channels and features 5 A contacts. The switching is designed to maintain current paths for signals not connected to the output or, when internal jumpers are removed, to provide high input resistance for making voltage measurements. The 3760 does not connect to the 6 common buses on the 3706A backplane. Daisy chaining cards can be achieved by using an output channel. Semiconductor testing, materials research, power supply testing, solar cell measurements, electrochemical applications and IC testing are among the applications simplified with the 3760 High Current Multiplexer Card.

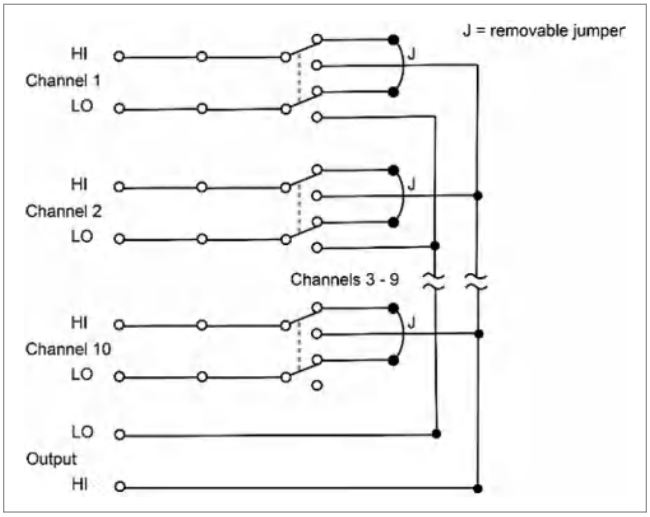

Specifications

Channels Per Card	10.
Contact Configuration	2-pole Form C with common guard.
Connector Type	Screw terminal, #16AWG maximum wire size.
Relay Drive Current	80 mA per relay typical.
Maximum Switching Levels	300 V, 5 A, 100 VA (resistive load only).
Maximum Applied Voltage	500 V.
Contact Life	$>10^7$ closures (cold switching), $>10^5$ closures (at maximum signal level).
Contact Resistance	<0.15 Ω to rated life.
Contact Potential	1 mV max.
Actuation Time	<15 ms, exclusive of mainframe.
Channel Isolation	$>10^9$ Ω, <50 pF.
Input Isolation	$>10^7$ Ω, <150 pF.
Common Mode Voltage	500 V peak.
EMC	Conforms to all European Union directives.
Operating Environment	0° to 50°C, up to 35°C at 70% relative humidity.
Storage Environment	–25°C to 65°C.

Available Services

-3760-3Y-EW	1 year factory warrenty extended to 3 years from date of shipment.
-3760-5Y-EW	1 year factory warrenty extended to 5 years from date of shipment.

3761 10-Channel Low Current Multiplexer Card

The 3761 provides quality low-current switching at an affordable price. The offset current error generated is specified <1pA, with typical performance at <30fA. When used with a voltage source and an electrometer or picoammeter, this card can easily automate insulation resistance tests, reverse leakage tests on semiconductor junctions, or gate leakage tests on FETs.

The 3761 features both current and voltage modes. In current mode, the current path is maintained even when the channel is open. This eliminates cable charging time between measurements. In voltage mode, the input is broken and is high impedance. Input connectors are SMA for shielding of the sensitive measurements. An SMA male to BNC male cable (3761-BNC-SMA) is available for compatibility with existing 7158 configurations and with Keithley accessory cables such as the 4801 and 4803. The 3761 does not connect to the 6 common buses on the 3706A backplane, but two outputs are provided to allow for chaining several scanner cards to one measurement instrument, allowing up to 60 channels, while an isolation relay in the output HI minimizes interaction between cards.

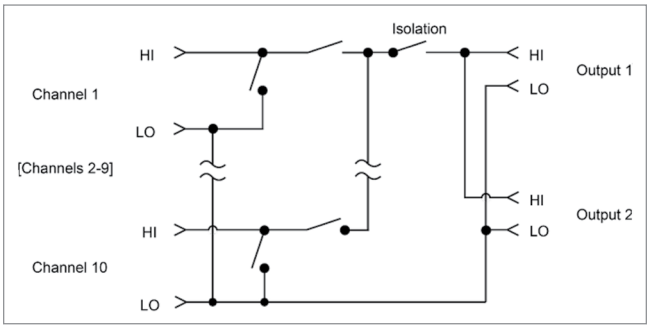

Specifications

Channels Per Card	10.
Contact Configuration	Form A. Signal LO is common for all 10 channels and output. When open, signal HI is shorted to signal LO in current mode. When open, signal HI is high impedance in voltage mode.
Connector Type	SMA.
Relay Drive Current	16 mA/relay typ.
Maximum Signal Level	30 V, 100 mA peak (resistive load).
Contact Life	$>10^6$ closures at maximum signal levels; $>10^7$ closures cold switching or at low signal levels.
Contact Resistance	<1 Ω.
Contact Potential	<200 µV.
Offset Current	<1 pA (<30 fA typical).
3dB Bandwidth	1 MHz typical.
Actuation Time	<1 ms, exclusive of mainframe.
Channel Isolation	$>10^{14}$ Ω, <50 pF.
Common Mode Isolation	$>10^9$ Ω, <150 pF.
Common Mode Voltage	<30 V maximum.

Available Accessories

3761-BNC-SMA	SMA to BNC Cable
7712-SMA-1	Low Noise Male to Male SMA Cable
4801	Low Noise Male to Male BNC Cable
4802-10	Low Noise BNC to Unterminated Cable, 10 ft.
4803	Low Noise BNC Cable kit

Available Services

-3761-3Y-EW	1 year factory warrenty extended to 3 years from date of shipment
-3761-5Y-EW	1 year factory warrenty extended to 5 years from date of shipment

3762 10–Channel High Voltage Multiplexer Card

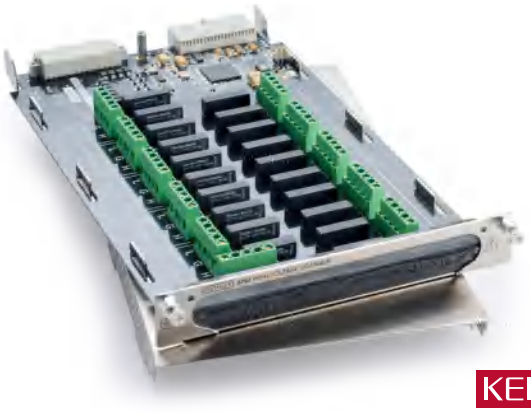

KEITHLEY
A Tektronix Company

The 3762 switches voltages up to 1000 V peak or currents up to 0.5 A. The current carry capacity of each relay contact is 1 A. Two-pole relays switch both circuit HI and circuit LO for full floating measurements. A Guard input common to all channels is provided for shielding or as a guard driven by a single instrument. Guards may be isolated by removing resistors installed at each input. Multiple switched guard circuits can be achieved by removing the jumper and connecting circuit Guard to the LO input terminal. The 3760 does not connect to the 6 common buses on the 3706A backplane. Daisy chaining cards can be achieved by using an output channel.

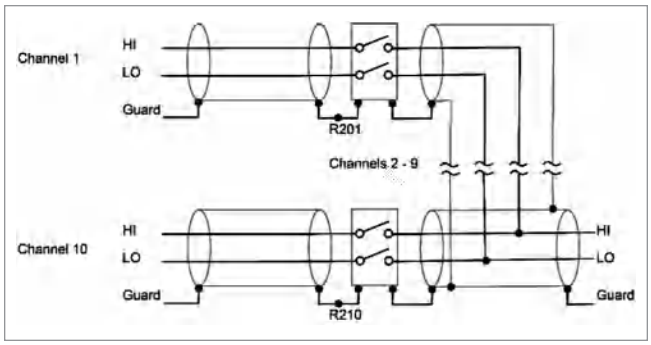

Specifications

Channels Per Card	10.
Contact Configuration	2 Form A with user selectable shield or driven guard.
Connector Type	Screw terminals, #16AWG maximum wire size
Relay Drive Current	80 mA per relay typ.
Maximum Switching Levels	1000 V, 0.5 A, 10 W.
Maximum Carry Current	1 A DC or RMS.
Contact Life	$>10^8$ closures (cold switching), $>10^6$ closures (hot switching at 1000 V, 1 mA).
Contact Resistance	<200 mΩ initial, <2 Ω for rated life.
Contact Potential	<35 µV per contact pair.
Actuation Time	<2 ms exclusive of mainframe.
Channel Isolation	$>10^{10}$ Ω, <10 pF.
Differential Input Isolation	$>10^9$ Ω, <10 pF.
Common Mode Input Isolation	$>10^9$ Ω, <150 pF.
Common Mode Voltage	1000 V peak.
EMC	Conforms with European Union Low Voltage Directive.
Operating Environment	0° to 50°C, 70% relative humidity up to 35° C.
Storage Environment	–25° to 65° C.

3765 Hall Effect Card

KEITHLEY
A Tektronix Company

The 3765 Hall Effect Card is intended for those who want to assemble their own economical Hall test systems. It can also form the foundation of a full Hall Effect system. Used along with the free software, the Keithley Hall Effect Test Suite (KHETS), the 3765 is easily paired with Keithley DMMs, current sources, and ammeters. The card and KHETS software take advantage of the built-in DMM in the 3706A so that an external voltmeter is not required for measurements.

The 3765 is a signal conditioning card designed to buffer test signals from the Hall sample to the measurement instrumentation and to switch current from a source to the Hall sample. When used with Keithley's 3706A mainframe, the 3765 provides the switching capability to measure Hall voltages as low as 50 nV and sample resistances in excess of 10^{12} Ω.

All accessories needed to connect the sample holder, scanner, instruments, and controller are included, greatly simplifying connections and reducing setup time. The 3765 is connected directly to the sample, and all instruments are connected via GPIB to the controller. The KHETS software for making resistivity and Hall measurements is available on our website (tek.com/keithley).

The 3765 can be operated in either low resistivity or high resistivity mode. In the high resistivity mode, input impedance is greater than 100 TΩ, input bias current is less than 50 fA, and output resistance is 10 kΩ. Input voltage ranges in both operating modes is –8 V to +8 V. If higher voltage is desired, Keithley recommends using a 6221/6517B system. Cabling and sample connections must be carefully designed to make full use of the capabilities of the 3765. Refer to Keithley's *Low Level Measurements* handbook for guidance in designing these connections.

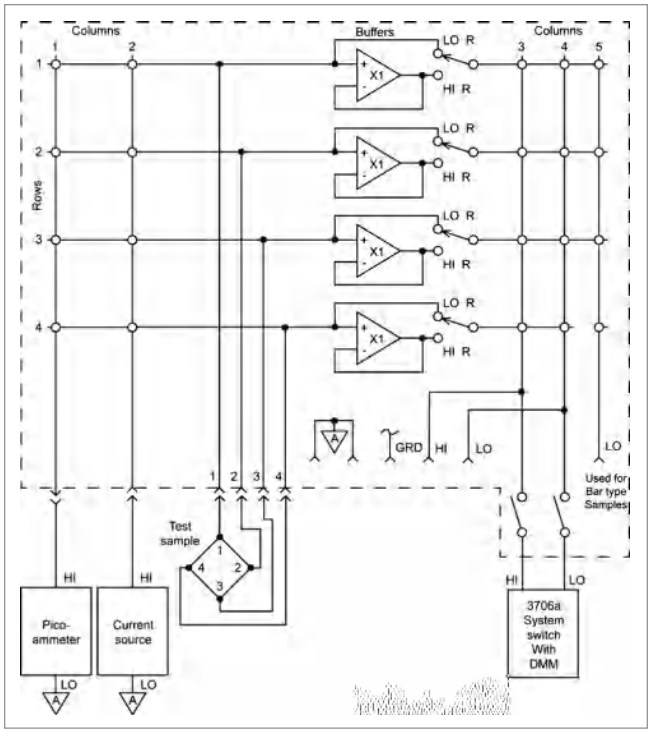

Tektronix

Specifications

High Resistivity Mode

Input Voltage Operating Range	–8 V to +8 V
Input Impedance	>100 TΩ in parallel with less than 3 pF
Input Bias Current	<50 fA at 23°C. Doubles approximately every 10°C rise in ambient room temperature.
Input Voltage Noise	<10 µV p-p, 0.1 to 10 Hz bandwidth.
Output Resistance	10 kΩ

Low Resistivity Mode

Input Voltage Operating Range	–8 V to +8 V
Input Impedance	>10 GΩ in parallel with less than 420 pF
Input Bias Current	<100 pA
Input Voltage Noise	<50 nV p-p, 0.1 to 10 Hz bandwidth
Input to Output Resistance	<30 Ω

General

Maximum Common Mode Voltage (analog ground to earth ground)	30 V peak, DC to 60 Hz bandwidth
Isolation (analog ground to earth ground)	>1 GΩ in parallel with 150 pF
Warm-Up Time	1 hour for rated specifications
Operating Environment	0° to 50° C, 70% relative humidity up to 35° C.
Storage Environment	–25° to 65° C

Contact Information:

Australia 1 800 709 465
Austria* 00800 2255 4835
Balkans, Israel, South Africa and other ISE Countries +41 52 675 3777
Belgium* 00800 2255 4835
Brazil +55 (11) 3530-8901
Canada 1 800 833 9200
Central East Europe / Baltics +41 52 675 3777
Central Europe / Greece +41 52 675 3777
Denmark +45 80 88 1401
Finland +41 52 675 3777
France* 00800 2255 4835
Germany* 00800 2255 4835
Hong Kong 400 820 5835
India 000 800 650 1835
Indonesia 007 803 601 5249
Italy 00800 2255 4835
Japan 81 (3) 6714 3086
Luxembourg +41 52 675 3777
Malaysia 1 800 22 55835
Mexico, Central/South America and Caribbean 52 (55) 88 69 35 25
Middle East, Asia, and North Africa +41 52 675 3777
The Netherlands* 00800 2255 4835
New Zealand 0800 800 238
Norway 800 16098
People's Republic of China 400 820 5835
Philippines 1 800 1601 0077
Poland +41 52 675 3777
Portugal 80 08 12370
Republic of Korea +82 2 565 1455
Russia / CIS +7 (495) 6647564
Singapore 800 6011 473
South Africa +41 52 675 3777
Spain* 00800 2255 4835
Sweden* 00800 2255 4835
Switzerland* 00800 2255 4835
Taiwan 886 (2) 2656 6688
Thailand 1 800 011 931
United Kingdom / Ireland* 00800 2255 4835
USA 1 800 833 9200
Vietnam 12060128

*** European toll-free number. If not accessible, call:** +41 52 675 3777

Rev. 02.2022

KEITHLEY
A Tektronix Company

Find more valuable resources at TEK.COM

Copyright © Tektronix. All rights reserved. Tektronix products are covered by U.S. and foreign patents, issued and pending. Information in this publication supersedes that in all previously published material. Specification and price change privileges reserved. TEKTRONIX and TEK are registered trademarks of Tektronix, Inc. All other trade names referenced are the service marks, trademarks or registered trademarks of their respective companies.
051122 SBG 1KW-61232-0