Introduction

Wavelength ranges

MMS Family
CGS Family
MCS FLEX Family
PGS Family

Software

Areas of application

Definitions and explanations

ZEISS Spectrometer Modules

Compendium of products, electronic and software solutions

ℹ **Information on interactivity on this page**

Explanatory product video on youtube.com

Email

www.zeiss.com

ZEISS Spectrometer Modules Compendium

Introduction

Wavelength ranges

MMS Family
CGS Family
MCS FLEX Family
PGS Family

Software

Areas of application

Definitions and explanations

// SPECTROMETER MODULES
MADE BY ZEISS

Email

www.zeiss.com

ZEISS Spectrometer Modules
Compendium

Introduction

Wavelength ranges

MMS Family
CGS Family
MCS FLEX Family
PGS Family

Software

Areas of application

Definitions and explanations

Introduction
Wavelength ranges
MMS Family
CGS Family
MCS FLEX Family
PGS Family
Software
Areas of application
Definitions and explanations

Click on the respective wavelength range to reach the technical data of the corresponding product.

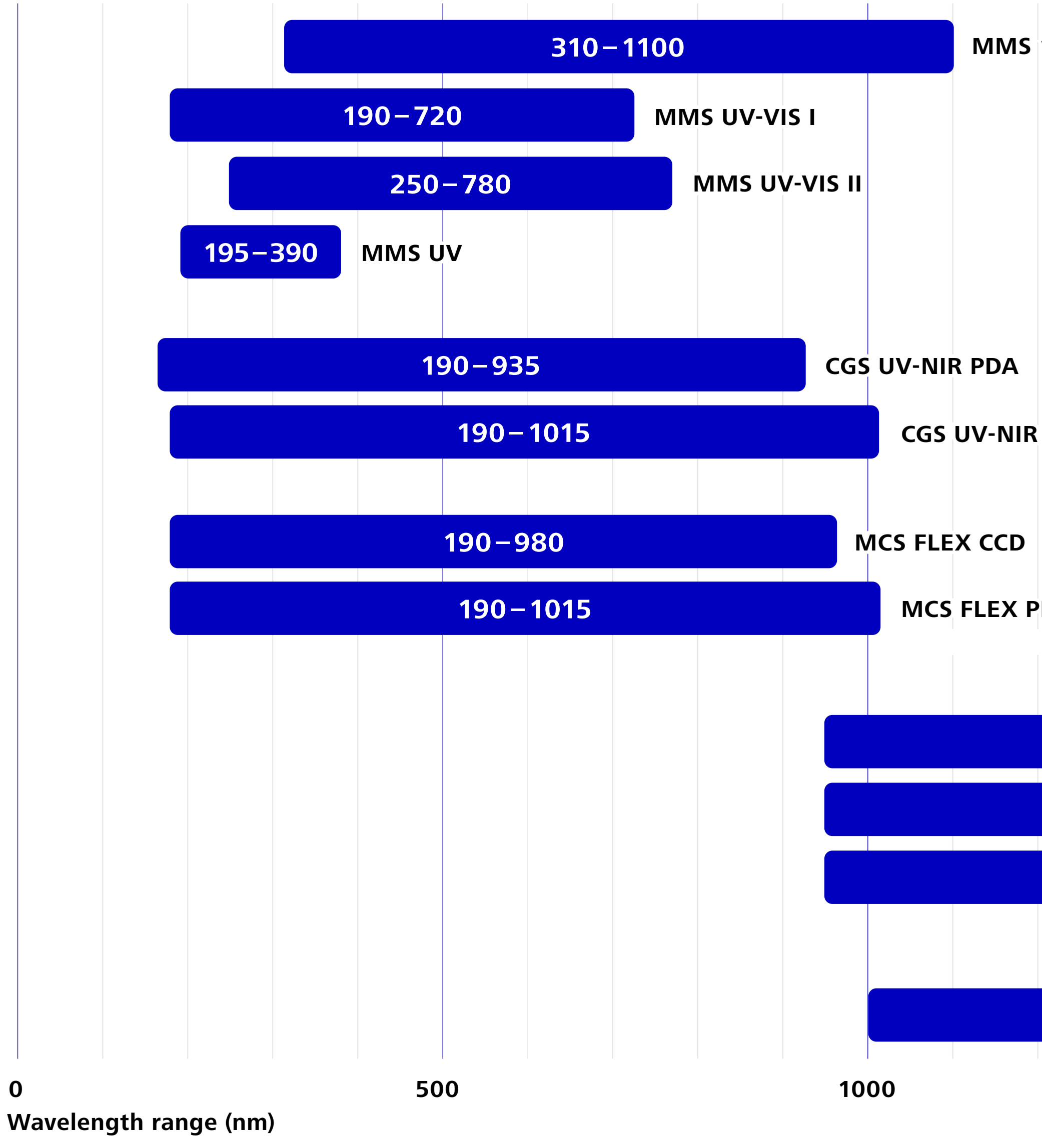

Introduction

Wavelength ranges

MMS Family
    Technical Data
    On-site electronics
CGS Family
MCS FLEX Family
PGS Family

Software

Areas of application

Definitions and explanations

You Tube
Watch the video
on Youtube

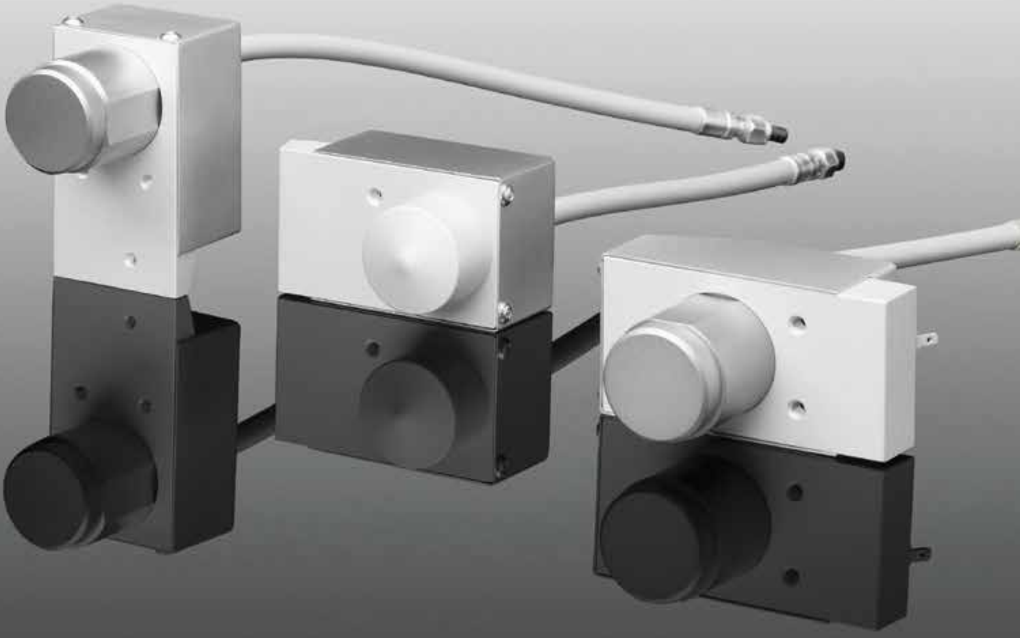

Introduction
Wavelength ranges
MMS Family
Technical Data
On-site electronics
CGS Family
MCS FLEX Family
PGS Family
Software
Areas of application
Definitions and explanations
Email
www.zeiss.com

MMS 1

Technical Data

Optical entrance		Fiber bundle consists of 30 quartz glass fibers with a 70 µm core diameter, designed as a cross-section converter
	Input: round	Diameter: 0.5 mm NA = 0.22 (homogeneous illumination of the acceptance angle) Mounted in an SMA connector
	Output: linear	70 µm x 2500 µm (entrance slit)
Grating		Flat-field, 366 l/mm (in the center)
Diode array		Manufacturer: Hamamatsu Type: S 3904-256Q in special housing (S 5713) (S 8381-256Q for the MMS 1 NIR enhanced) Number of pixels: 256
Spectral range		310 nm – 1100 nm Specifications for the range 360 nm – 900 nm (UV-VIS enhanced) 400 nm – 1000 nm (NIR enhanced)
Wavelength accuracy		0.3 nm
Temperature drift		< 0.01 nm/K
Spectral pixel distance		$\Delta\lambda_{\text{Pixel}} \approx 3.3$ nm
Resolution		$\Delta\lambda_{\text{FWHM}} \approx 10$ nm
Sensitivity		$\approx 10^3$ Vs/J
Stray light		≤ 0.8 % with halogen lamp for UV-VIS enhanced Transmission at 450 nm with GG 495 filter ≤ 0.2 % with halogen lamp for NIR enhanced Transmission at 650 nm with RG 695 filter
Dimensions	**With housing**	70 x 50 x 40 mm^3
	Cross-section converter (outer length)	Standard: 240 mm, available up to 1 m

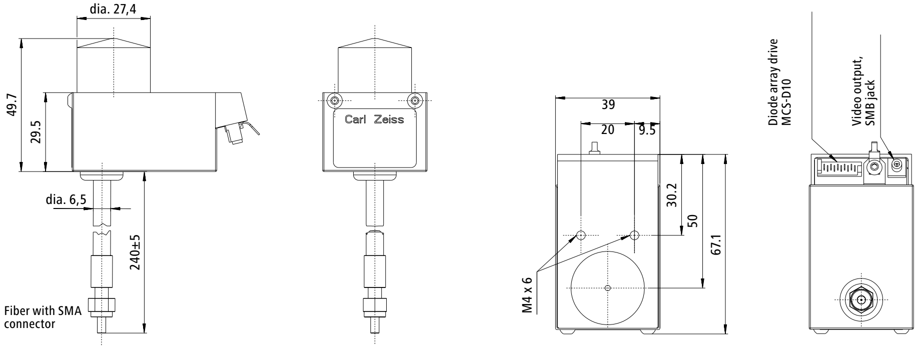

Order number	Name	Wavelength range	Description
224001-9001-000	MMS 1 UV/VIS enh.	310 – 1100 nm	PDA with 256 pixels, 240 mm external fiber length
224001-9011-000	MMS 1 UV/VIS enh.	310 – 1100 nm	PDA with 256 pixels, 180 mm external fiber length
000000-1233-038	MMS 1 NIR enh.	310 – 1100 nm	S8381 PDA with 256 pixels, 240 mm external fiber length

Introduction
Wavelength ranges
MMS Family
Technical Data
On-site electronics
CGS Family
MCS FLEX Family
PGS Family
Software
Areas of application
Definitions and explanations

MMS UV

Technical Data

Optical entrance		Fiber bundle consists of approx. 15 quartz glass fibers with a 70 µm core diameter, designed as a cross-section converter
	Input: round	Diameter: 0.4 mm NA = 0.22 (homogeneous illumination of the acceptance angle) Mounted in an SMA connector
	Output: linear	70 µm x 1250 µm (entrance slit)
Grating		Flat-field, 1084 l/mm (in the center), blazed for approx. 220 nm
Diode array		Manufacturer: Hamamatsu Type: S 3904-256N in special housing Number of pixels: 256
Spectral range		195 nm – 390 nm Specifications for the 220 nm – 390 nm range
Wavelength accuracy		0.2 nm
Temperature drift		< 0.005 nm/K
Spectral pixel distance		$\Delta\lambda_{\text{Pixel}} \approx 0.8$ nm
Resolution		$\Delta\lambda_{\text{FWHM}} \approx 3$ nm
Sensitivity		$\approx 10^3$ Vs/J
Stray light		≤ 0.3 % deuterium lamp Transmission at 240 nm with NaJ solution (10 g/l)
Dimensions	**With housing** **Cross-section converter (outer length)**	70 x 60 x 40 mm³ Standard: 240 mm, available up to 1 m

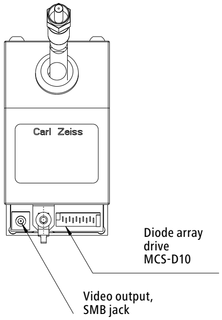

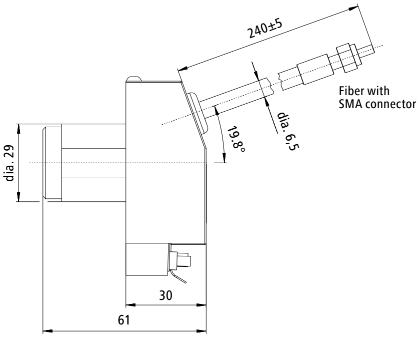

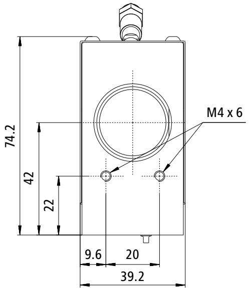

Order number	Name	Wavelength range	Description
224002-9020-000	MMS UV	195 – 390 nm	PDA with 256 pixels, 240 mm external fiber length
000000-1392-178	MMS UV	195 – 390 nm	PDA with 256 pixels, 240 mm external fiber length, low solarization

Email
www.zeiss.com

Introduction

Wavelength ranges

MMS Family
  Technical Data
  On-site electronics
CGS Family
MCS FLEX Family
PGS Family

Software

Areas of application

Definitions and explanations

Introduction

Wavelength ranges

MMS Family
CGS Family
  Technical Data
  On-site electronics
MCS FLEX Family
PGS Family

Software

Areas of application

Definitions and explanations

Watch the video on Youtube

CGS UV-NIR CCD

Technical Data

Optical entrance	SMA connector 50 µm optical slit (can be varied upon request) NA = 0.22 (homogeneous illumination of the acceptance angle) 600 µm mono-fiber interface recommended for customer
Grating	Flat field 534 l/mm (in the center), blazed for approx. 230 nm
Spectral range	190 nm – 1015 nm
Resolution (FWHM) with 50 µm slit	UV-VIS < 2.2 nm NIR < 2.5 nm
Stray light (ASTM 387-04)	3 AU at 240 nm with deuterium lamp (absorption A_{10} of NaI)
Integration time (dependent on on-site electronics)	min. 30 µs
Sensor	Hamamatsu S11156, back-thinned CCD, 2048 pixels Detector height: 1 mm Pixel pitch: 14 µm
Housing size L x W x H	78 x 30 x 75 mm³

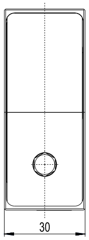

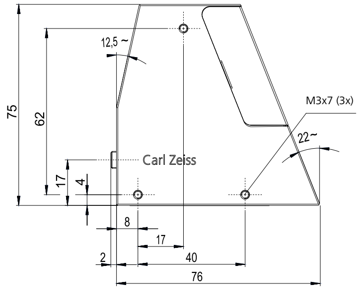

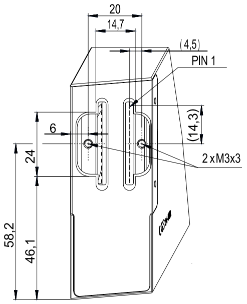

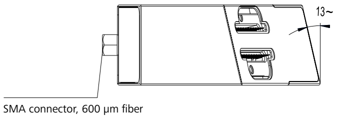

SMA connector, 600 µm fiber

Order number	Name	Wavelength range	Description
000000-1794-791	CGS UV-NIR CCD	190 – 1015 nm	Back-thinned CCD, 2048 pixels

Introduction

Wavelength ranges

MMS Family
CGS Family
    Technical Data
    On-site electronics
MCS FLEX Family
PGS Family

Software

Areas of application

Definitions and explanations

Email

www.zeiss.com

Introduction

Wavelength ranges

MMS Family
CGS Family
  Technical Data
  On-site electronics
MCS FLEX Family
PGS Family

Software

Areas of application

Definitions and explanations

Introduction
Wavelength ranges
MMS Family
CGS Family
MCS FLEX Family
Technical Data
On-site electronics
PGS Family
Software
Areas of application
Definitions and explanations

You Tube
Watch the video on Youtube

MCS FLEX PDA

Technical Data

Optical entrance	Cross-section converter
Cross-section converter	Diameter: 0.5 mm NA = 0.22 (consistent illumination of the acceptance angle) Mounted in an SMA connector
Grating	Flat field 248 l/mm (in the center), blazed for approx. 250 nm
Diode array	Manufacturer: Hamamatsu Type: S 3904-1024Q Number of pixels: 1024
Spectral range	190 – 1015 nm
Wavelength accuracy	0.5 nm
Temperature drift	≤ 0.009 nm/K
Spectral pixel distance	$\Delta\lambda_{Pixel} \approx 0.8$ nm
Resolution	$\Delta\lambda_{FWHM} \approx 3-4$ nm
Stray light	≤ 0.1 % at 340 nm with deuterium lamp (Transmission of NaNO$_2$ solution, 50 g/l, 1cm)
Housing size L x W x H	160.3 x 62 x 122.2 mm

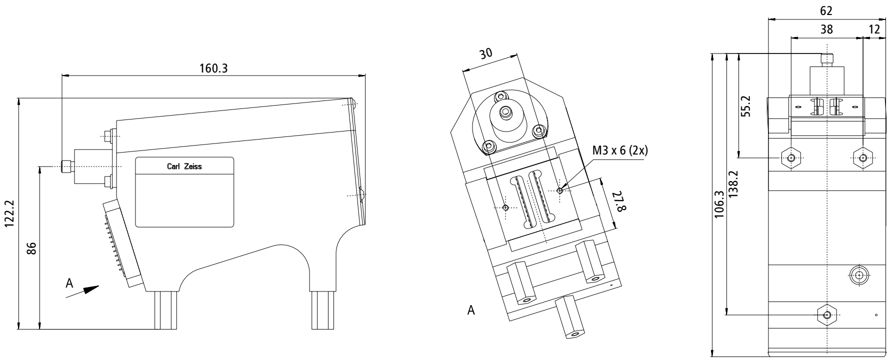

Order number	Name	Wavelength range	Description
000000-1459-276	MCS FLEX UV-NIR	190 – 1015 nm	PDA with 1024 pixels

Introduction

Wavelength ranges

MMS Family
CGS Family
MCS FLEX Family
  Technical Data
  On-site electronics
PGS Family

Software

Areas of application

Definitions and explanations

Email

www.zeiss.com

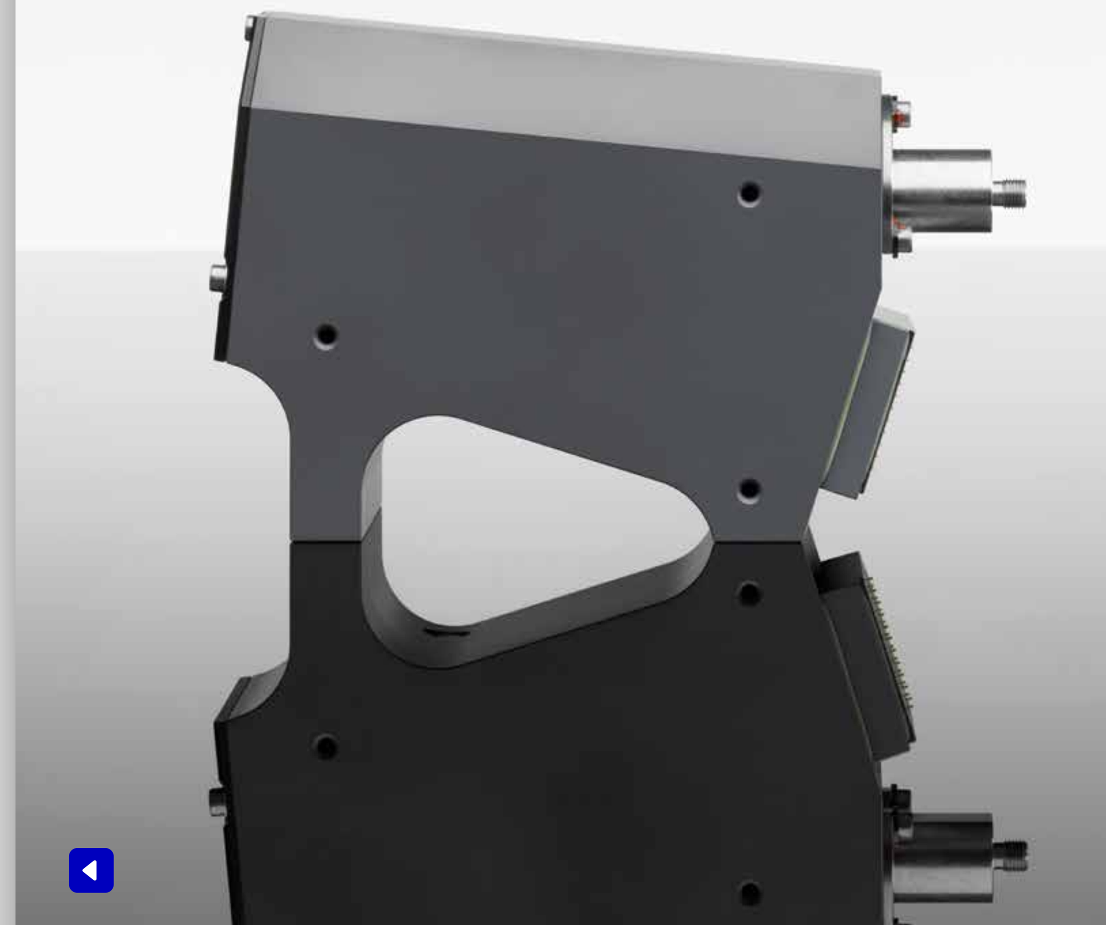

Introduction

Wavelength ranges

MMS Family
CGS Family
MCS FLEX Family
  Technical Data
  On-site electronics
PGS Family

Software

Areas of application

Definitions and explanations

Introduction
Wavelength ranges
MMS Family
CGS Family
MCS FLEX Family
PGS Family
Technical Data
On-site electronics
Software
Areas of application
Definitions and explanations

You Tube
Watch the video on Youtube

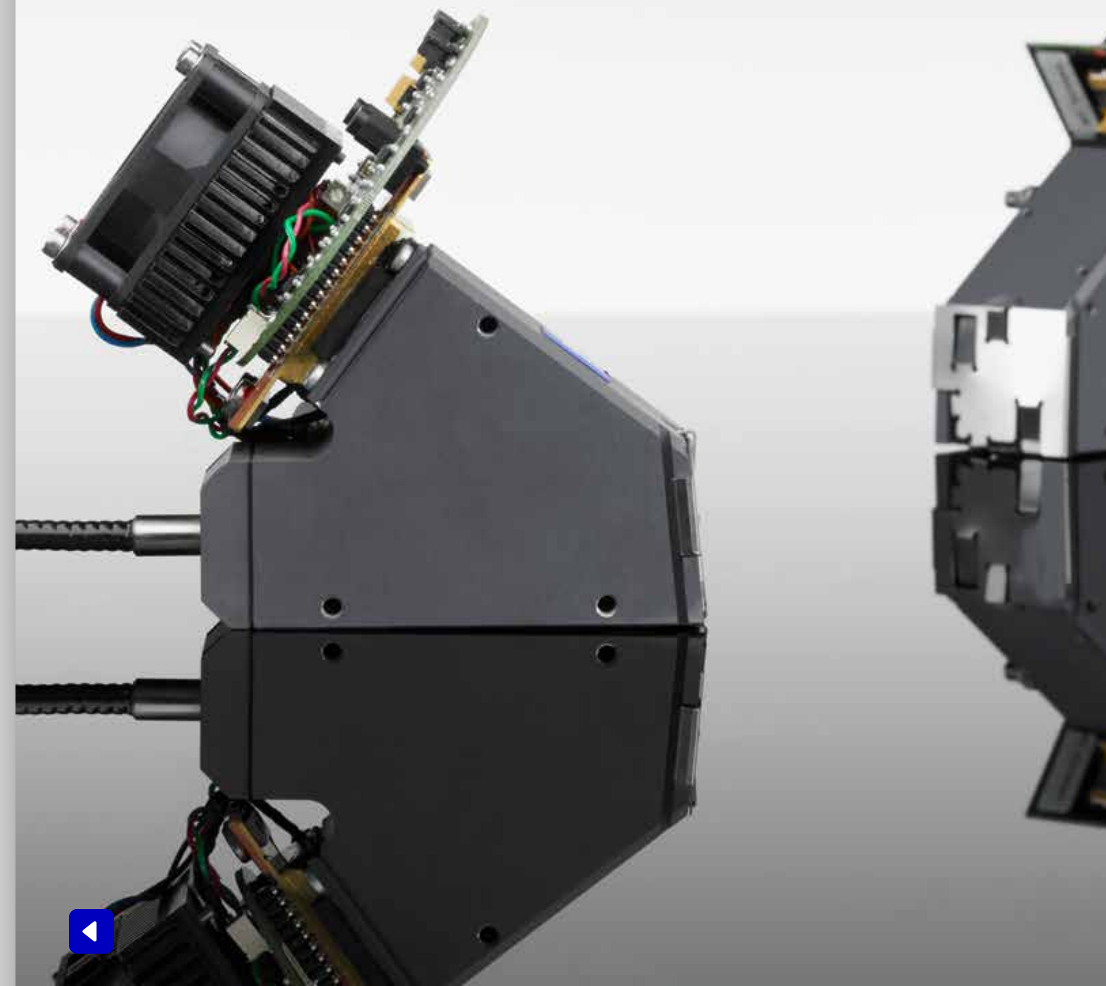

Introduction
Wavelength ranges
MMS Family
CGS Family
MCS FLEX Family
PGS Family
Technical Data
On-site electronics
Software
Areas of application
Definitions and explanations

PGS NIR 1.7 -512

Technical Data

Optical entrance **Input: round** **Output: linear**	Fiber consists of Infrasil quartz glass Diameter: 0.6 mm Length 300 mm NA = 0.22 (homogeneous illumination of the acceptance angle) Mounted in an SMA connector Slit width: 80 µm
Filter	950 nm edge filter
Grating	Plane grating, 484 l/mm, blazed for approx. 1.2 µm
Diode array	Manufacturer: Hamamatsu Type: S9204 Number of pixels: 512
Spectral range	960 – 1690 nm
Wavelength accuracy	± 1 nm
Temperature drift (10 – 40°C)	< 0.012 nm/K
Spectral pixel distance	$\Delta\lambda_{Pixel} \approx 1.5$ nm
Resolution	$\Delta\lambda_{FWHM} \approx 7$ nm
Stray light	≤ 0.1 % as transmission of 10 mm of water at 1405 nm (measured using a halogen lamp)
Weight	approx. 590 g
Operating temperature	0 – 40°C (standard, depending on cooling electronics)
Storage temperature	-40 – +70°C
Minimal bending radius of fiber (for storage and transport)	50 mm
Minimal bending radius in operation (for wavelength accuracy)	100 mm

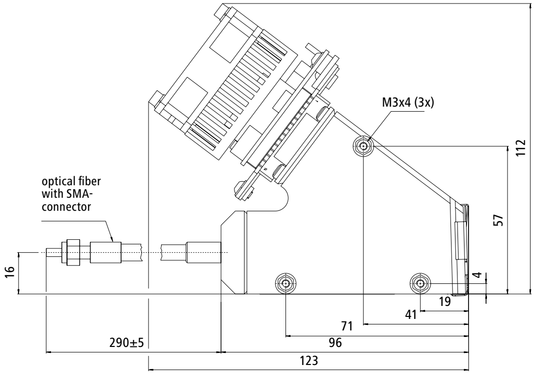
M3x4 (3x)
112
57
4
optical fiber with SMA-connector
16
19
41
71
96
123
290±5

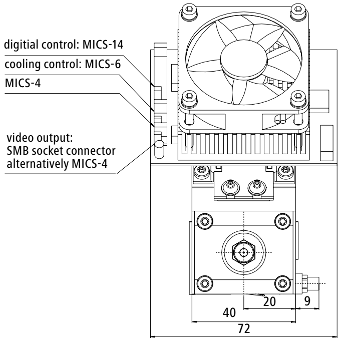
digitial control: MICS-14
cooling control: MICS-6
MICS-4
video output: SMB socket connector alternatively MICS-4
20
9
40
72

Order number	Name	Wavelength range	Description
000000-1307-412	PGS NIR 1.7 t1-512	960 – 1690 nm	NIR spectral sensor, Peltier cooled, InGaAs PDA up to 1.7 µm 512 pixels, dispersion: 1.5 nm/pixel, external fiber length: 300 mm

Introduction

Wavelength ranges

MMS Family
CGS Family
MCS FLEX Family
PGS Family
Technical Data
On-site electronics

Software

Areas of application

Definitions and explanations

PGS NIR 2.0-256

Technical Data

Optical entrance		Fiber consists of Infrasil quartz glass
	Input: round	Diameter: 0.6 mm Length 300 mm NA = 0.22 (homogeneous illumination of the acceptance angle) Mounted in an SMA connector
	Output: linear	Slit width: 80 µm
Filter		1350 nm edge filter
Grating		Plane grating, 484 l/mm, blazed for approx. 1.4 µm
Diode array		Manufacturer: Hamamatsu Type: G 9206 Number of pixels: 256
Spectral range		1340 – 2000 nm
Wavelength accuracy		± 1 nm
Temperature drift (10–40°C)		< 0.012 nm/K
Spectral pixel distance		$\Delta\lambda_{Pixel} \approx 3$ nm
Resolution		$\Delta\lambda_{FWHM} \approx 8$ nm
Stray light		≤ 0.1 % as transmission of 10 mm of water at 1405 nm (measured using a halogen lamp)
Weight		approx. 590 g
Operating temperature		0 – 40°C (standard, depending on cooling electronics)
Storage temperature		-40 – +70°C
Minimal bending radius of fiber (for storage and transport)		50 mm
Minimal bending radius in operation (for wavelength accuracy)		100 mm

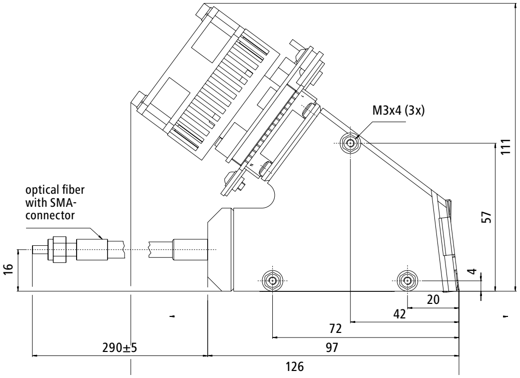
M3x4 (3x)
optical fiber with SMA-connector
111
57
16
4
20
42
72
97
126
290±5

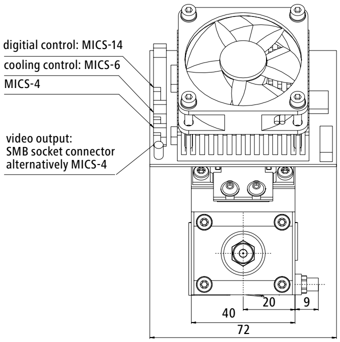
digitial control: MICS-14
cooling control: MICS-6
MICS-4
video output: SMB socket connector alternatively MICS-4
20
9
40
72

Order number	Name	Wavelength range	Description
000000-1396-757	PGS NIR 2.0 t2	1340 – 2000 nm	NIR spectral sensor, Peltier cooled Extended InGaAs PDA up to 2.2 µm 256 pixels, dispersion: 1.5 nm/pixel, external fiber length: 300 mm

PGS NIR 1.7-256 UC

Technical Data

Optical entrance	**Input: round**	FSMA 905 Use NIR-lightguides with core diameter ≥ 600 µm, NA = 0.22 to 0.37
	Output: linear	Slit width: 80 µm
Filter		950 nm edge filter
Grating		Plane grating, 484 l/mm, blazed for approx. 1.2 µm
Diode array		Manufacturer: Hamamatsu Type: G9211-01SPL Number of pixels: 256
Spectral range		960 – 1690 nm
Wavelength accuracy		± 1 nm
Temperature drift (10 – 40°C)		< 0.012 nm/K
Spectral pixel distance		$\Delta\lambda_{\text{Pixel}} \approx 3$ nm
Resolution		$\Delta\lambda_{\text{FWHM}} \approx 8$ nm
Stray light		≤ 0.1 % as transmission of 10 mm of water at 1405 nm (measured using a halogen lamp)
Weight		approx. 590 g
Operating temperature		0 – 40°C (standard, depending on cooling electronics)
Storage temperature		-40 – +70°C

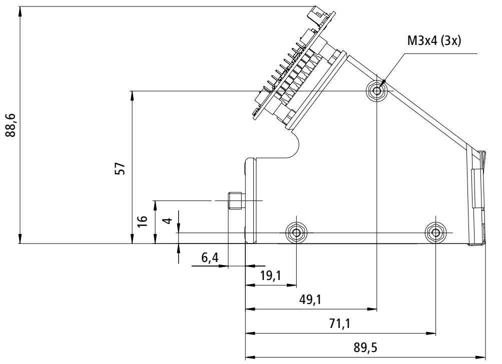

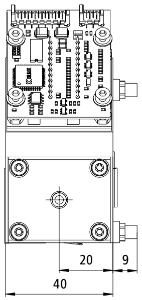

Order number	Name	Wavelength range	Description
000000-2109-070	PGS NIR 1.7-256 UC	960 – 1690 nm	NIR spectral sensor, uncooled Extended InGaAs PDA up to 1.7 µm 256 pixels, dispersion: 3 nm/pixel, external fiber length: 300 mm

Introduction
Wavelength ranges
MMS Family
CGS Family
MCS FLEX Family
PGS Family
  Technical Data
  On-site electronics
Software
Areas of application
Definitions and explanations

Introduction

Wavelength ranges

MMS Family
CGS Family
MCS FLEX Family
PGS Family

Software

Areas of application

Definitions and explanations

Software Solutions

Directly in the process

Measurement • FilmDetect MCS721
54.51
67.33
0.500

The architecture of the software products for capturing and processing spectral data is based on a modular structure. This ensures that the software meets diverse, customer-specific specifications and enables different hardware configurations to be adjusted flexibly. For the various operating electronics units, device drivers are available for Windows 2000, XP and Vista.

The universal Aspect Plus program package featuring comprehensive functions is available along with the drivers for the PC bus interface. A programming interface for the SDACQ 32 MP function library is also offered to ensure easy integration into customer-specific applications. This interface directly supports C/C++/Visual Basic and Delphi, and a LabVIEW™ driver for programming in a LabVIEW™ environment. It is possible to program with finished menu structures for data capture by using the SDPROC32 function library for data capture, configuration and entering parameters.

The SDACQ32MP function library directly addresses these device drivers and supplies a hardware-independent collection of functions, enabling the configuration of the on-site electronics and spectral data capture.

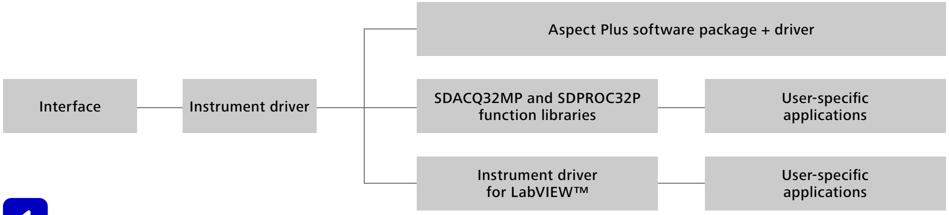
Aspect Plus software package + driver
Interface
Instrument driver
SDACQ32MP and SDPROC32P function libraries
User-specific applications
Instrument driver for LabVIEW™
User-specific applications

Introduction
Wavelength ranges
MMS Family
CGS Family
MCS FLEX Family
PGS Family
Software
Areas of application
Definitions and explanations

Areas of application

The areas of application for these spectrometers are diverse because of their flexible design. They can be classified in accordance with measurement principles, areas of application or the materials to be analyzed. Compactness and insensitivity to external influences are crucial so that modules can be installed in close proximity to production. An on-line control option is provided in most of the applications mentioned below.

Measuring principles:
1. Emission
2. Diffuse reflection
3. Reflection
4. Transmission – absorption
5. White-light interference

Emission

A part of the light is injected into the spectrometer to determine the spectral emission of a light source. In many cases, the coupling fiber bundle only needs to be brought close to the light source because of the high light sensitivity. An achromatic converging lens can be used for optimization.

Examples
- Monitoring illuminators (aging)
- Determining the wavelength of LEDs or (tunable) lasers
- Luminescence, fluorescence
- Monitoring the solar spectrum, burns, discharges or plasmas
- Determining the temperature T as per Wien's displacement law: e.g.: 3000 K <—> 966 nm

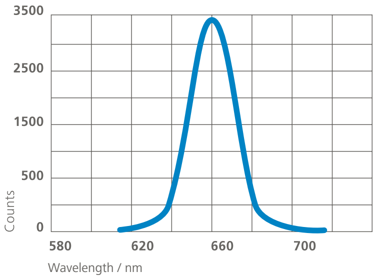

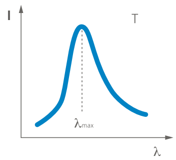

λ_{max} x T = 2.8978 x 10^3 m x K

Requirements
The wavelength accuracy is very high for the size of the module, enabling, through a sub-pixel resolution procedure, an exact identification of the wavelength from light sources which emit a line, e.g. LEDs (calibration). The spectrometer modules are not suitable for analyzing emissions which contain many spectrally adjacent lines.

Diffuse reflection

The diffuse reflection (from rough surfaces) provides information on the color of the surface. In addition to the spectrometer, the light source and the placement (angle to surface normal) of the spectral sensor are important. In most cases, a light source with a wide-band emission is used, e.g. a halogen lamp. In this case, it is usually sufficient to bring the cross-section conversion entrance close to the surface to be measured without an additional optic.

Examples
- Color measurements on diverse surfaces (materials)
- Coating condition
- Determining paper quality

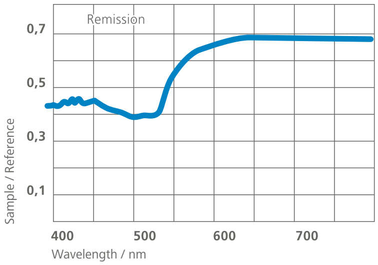

Requirements
The spectrometer modules have been specially developed for color measuring technology. Their high repeatability and light intensity at a moderate spectral resolution meet the specifications exactly.

Reflection

Reflection is a special case of diffuse reflection and refers to the directionally reflected light from 'smooth' low-scatter surfaces. A light source is also required in addition to the sensor. Please note that the reflectivity depends strongly on the α angle. A simple setup for measurements under 0°C is possible by using a special light guide which both supplies the light and transmits it to the detector.

Email
www.zeiss.com

Introduction

Wavelength ranges

MMS Family
CGS Family
MCS FLEX Family
PGS Family

Software

Areas of application

Definitions and explanations

Definitions and Explanations of Terms

One of the most important criterion when selecting a spectrometer is the spectral range which the spectrometer must cover. It is usually clear what range is required. However, the two other important criteria for a spectrometer – the spectral and the intensity-related (dynamic) resolution – are not usually clearly defined.

Spectral resolution

The following four terms refer to 'spectral' resolution:

1. Rayleigh criterion – $\Delta\lambda_{Rayleigh}$ (DIN standard)
2. Line width, mostly half-value width or full width at half maximum – $\Delta\lambda_{FWHM}$
3. Sub-pixel resolution (also called: 'software resolution')
4. Pixel dispersion – Δλ/pixel

A meaningful definition results from the application. A spectrometer is essentially used to perform three different jobs. These tasks may, of course, overlap:

1. Splitting two or more lines within a spectrum – analyzing compounds
2. Determining the line form – usually determining the width of a line or a band (FWHM or $1/e^2$-width)
3. Measuring a line with respect to peak wavelength and intensity at the maximum – e.g. determining emissions.

Spectral resolving power
The Rayleigh criterion is relevant for splitting spectral lines as per DIN. This shows how large the spectral distance of two lines $\Delta\lambda_{Rayleigh}$ must be so that each line can be recognized as separate from the other. The spectral width of the individual lines $\Delta\lambda_{Line}$, (see above) must be significantly less than their distance. This is the only significant definition for the spectral resolving power.

2 lines with $I_{max},1 = I_{max},2$ are split if
$\Delta I_{decrease} \geq 19\ \%$.

Spectral line width
The widening of the line via the spectrometer must be less than the spectral width of the line itself so that the width of a spectral line $\Delta\lambda_{line}$ can be measured. It is important to know the expansion $\Delta\lambda_{FWHM}$ created by the spectrometer. This property is related to the Rayleigh criterion.

$$\Delta\lambda_{FWHM} = \lambda_2(I_{max}/2) - \lambda_1(I_{max}/2)$$
$$\Delta\lambda_{FWHM} \approx 0.8 \times \Delta I_{Rayleigh}$$

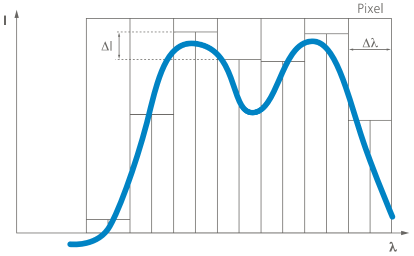

Wavelength accuracy
To determine the absolute spectral position λ – with a certain accuracy $\Delta\lambda_\pm$ – of an individual line, a spectrometer with at least this absolute wavelength accuracy $\Delta\lambda_\pm$ is required. This parameter depends on the position accuracy of the readout elements (pixels or slit/detector) and/or the stability of this position (see below) characterized by the repeatability. In contrast, the absolute wavelength accuracy only depends indirectly on the dispersive and focal properties of the spectrometer and is not a 'resolution' in the traditional sense. The stability (or repeatability) of a spectral sensor depends on the mechanical stability and the temperature-determined wavelength drift. The former is completely noncritical for spectrometer modules and the drift is practically negligible.

Dispersion
The specification Δλ / pixel (= $\Delta\lambda_{pixel}$) has nothing to do with spectral resolution. Instead, it is just the linear dispersion of a diode array spectrometer. Pixel dispersion and spectral resolution are linked via the width of the entrance slit and the imaging properties: if the entrance slit is imaged on approx. 3 pixels, triple the pixel dispersion corresponds approximately to $\Delta\lambda_{Rayleigh}$.

$$\Delta\lambda_{Rayleigh} \approx 3 \times \Delta\lambda_{pixel}$$

Special features of diode array spectrometers (DAS)

Spectral resolution
Determined by the fixed position of the pixels and/or the wavelength of the radiated light, the resolution is different than on monochromators/spectrometers with movable elements. Resolution – as defined by "splitting two adjacent lines" – depends on the relative position of these lines with respect to the pixels:

If two closely adjacent lines are imaged onto the pixels in such a way that the minimum falls onto the middle pixel (I_2) and the maxima fall on the two neighboring pixels (I_1, I_3), the lines can be split if the displayed intensity is $I_2 < 0.81 \times I_1$ (I_3). Δλ is exactly two pixels ($2 \times \Delta\lambda_{pixel}$).

Email

www.zeiss.com

Accuracy
Measurements of minimal changes and stability depend directly on each other and are essentially determined by the noise within the electronics because most spectrometers ensure a stable 'light path.' As with all sizes, it is important how a value – in the truest sense of the word – is determined. For the spectrometer module specifications, e.g. a 10 ms integration time is selected and the standard deviation $\Delta\sigma$ is calculated above 20 captures. This supplies a measure for the accuracy ΔI which can be used to determine an intensity value.

$$\Delta I = I_{Noise} = \Delta\sigma$$

Dynamics and intensity changes
The dynamic is understood as the relationship between the saturation level I_{sat} and the noise I_{noise} <—> $\Delta\sigma$ and corresponds to the signal-noise raio S/N. (The usable range is still reduced by the dark current.) The S/N depends not only on the detector but also the digitization which provides the small step width into which a suitable signal can be separated.

$$\text{Dynamic} = S/N = I_{sat} / I_{noise}$$

Of course the weakest link in the chain determines the signal-to-noise ratio to be achieved. With a 14 bit converter e.g. – this corresponds to 16384 steps or increments – and a noise of $\Delta\sigma$ = 1 count, a signal (fully controlled) can actually be divided into 16384 steps. The slightest measurable change is thus 1/16384 of the saturation signal. There is an uncertainty of four counts with a noise of four counts, i.e. only 4/16384 of the saturation signal can be measured as a definitive change and/or the signal can be meaningfully divided into 4069 steps.

At this point it should be noted that a higher dynamic range is only useful if the detector is adjusted so that it is equally high: you should always try to reach a high level of light so that the high sensitivity of the ZEISS spectrometers is beneficial.

$$\text{Dynamic} = \text{Range ADC}/\Delta\sigma$$

Linearity

These statements only apply to an ideal detector linearity and the connected electronics, i.e. if the measured charge is linearly dependent on the irradiated intensity. The admissible deviation must be specified for quantitative information to be obtained. Fortunately, modern semi-conductor detectors exhibit almost perfect linear behavior over many ranges. Before reaching saturation (the extreme case of non-linearity), however, the increase in the electricity supplied (information carrier for intensity) is no longer linear to the number of photons hitting the photosensitive material The linearity range is consequently smaller than the dynamic range.

External influences
As the graphic shows, a change of temperature T does not cause any change in sensitivity. In the range up to 1100 nm, the sensitivity even increases as the temperature rises. At temperatures between - 50 and + 50 °C, the sensitivity changes by less than 1% in the range of 1 to 1.55 µm, even for InGaAs photodiode arrays. Only outside of the specified range is a stronger temperature influence caused by a different coating. (Falling temperatures cause reduced sensitivity on the band edge.)

The photodiode arrays used do not show any deterioration in the signal-to-noise ratio. Only the dark current I_{dark} increases with rising temperature, resulting in a reduction of the dynamic range. This is why detectors – in particular InGaAs diode arrays – are often cooled. With this in mind, it should be noted that the light quantities to be measured are also subject to fluctuations. The instability of the illumination source is often the limiting factor.

$$I_{dark}(T+7K) = 2I_{dark}(T)$$

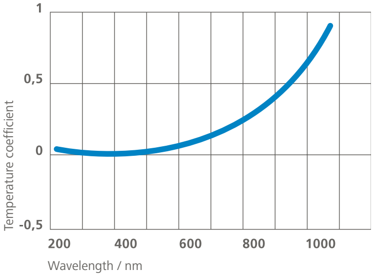

Sensitivity
The 'smallest detectable change' is a relative specification. It is significantly more difficult to specify the smallest detectable quantity of light at all. Or: how many photons are needed so that the detection electronics detect a change? The difficulties stem from determining the light intensity of a light source and the coupling efficiency. These are also dependent on the wavelength: first because all components have wavelength-dependent efficients, including the coupling; second because the bandwidth for the sensitivity measurements are of crucial importance. The simplest case is a light source with a very narrow band, as is featured with most lasers. The situation is at least clear if the bandwidth is significantly smaller than the spectrometer bandwidth. The MMS value of over 10^{13} counts/Ws has been measured with a red HeNe laser.

Introduction
Wavelength ranges
MMS Family
CGS Family
MCS FLEX Family
PGS Family
Software
Areas of application
Definitions and explanations

Email
www.zeiss.com

The moment you achieve absolute confidence.
This is the moment we work for.
// SPECTROMETER MODULES
MADE BY ZEISS

Carl Zeiss Spectroscopy GmbH
Carl-Zeiss-Promenade 10
07745 Jena, Germany

Phone: + 49 3641 64-2838
Fax: + 49 3641 64-2485

Email: info.spectroscopy@zeiss.com
www.zeiss.com/spectroscopy

Modules

cts, electronic components

Explanatory product video
on youtube.com

Page navigation
Previous page | Next page

The moment you discover that your expectations have been exceeded.
This is the moment we work for.

Introduction

Your application is our motivation

A traditional spectrometer and/or a traditional monochromator consists of a dispersive medium, an entrance and an exit slit and imaging elements which generate a parallel beam path. To capture a spectrum, a detector behind the exit slit must capture the light sequentially while the dispersive element or the exit slit is moved. This sort of mechanical movement requires time and is prone to interference. However, short measuring times and insensitivity to external influences are quite advantageous for many applications – especially in industry. That is why ZEISS began developing the diode array spectrometers at the end of the 1970s. In place of the exit slit, these spectrometers have a diode array and, through this replacement, capture a complete spectrum simultaneously in a fraction of a second, making moving components unnecessary. The design of the spectrometer module family from ZEISS is based on reducing the optical-mechanical design and the number of components to the physical minimum while using the greatest possible number of identical components for different versions.
In the last few years, ZEISS has developed a large number of diverse spectrometer modules for very different applications and requirements. All of these modules offer a key benefit: all spectrometer parts are permanently affixed to each other. This ensures a very high degree of insensitivity to mechanical vibrations and thus a high level of reliability. Moreover, the entire design is maintenance-free, i.e. recalibration is not necessary. The foundation for the high quality of the spectrometer is the technological know-how at ZEISS for mathematical designs, structuring (grating manufacture and replication), coatings and material processing. Ultimately the joining technology is decisive for ensuring a high degree of insensitivity to influences such as vibrations and, especially, temperature fluctuations.

The following spectrometer module families have been developed at ZEISS:

- **MMS** Monolithic Miniature Spectrometer
- **CGS** Compact Grating Spectrometer
- **MCS FLEX** Multi-Channel Spectrometer
- **PGS** Plane Grating Spectrometer

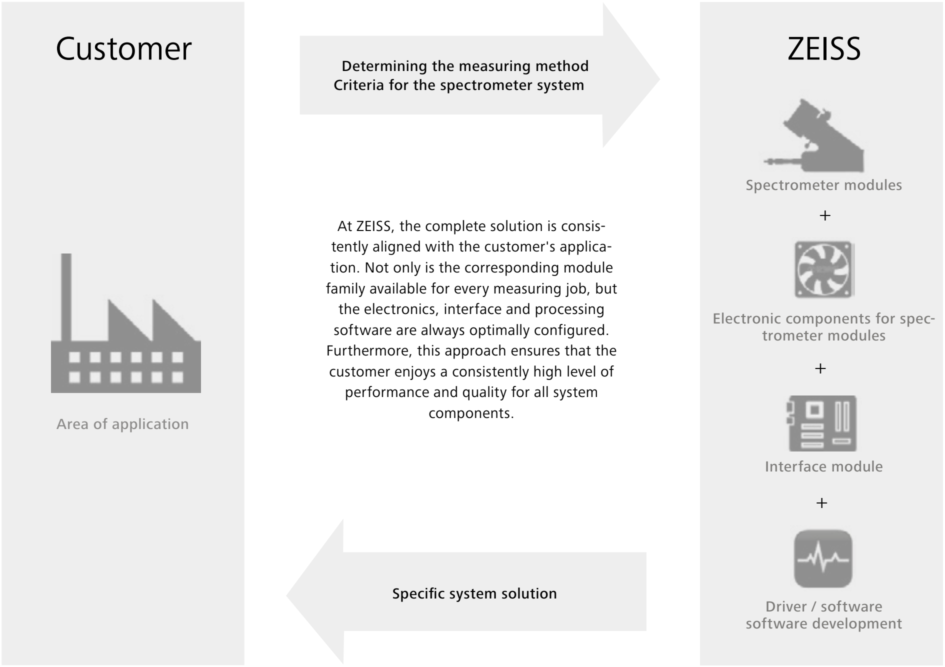

Customer

Area of application

Determining the measuring method
Criteria for the spectrometer system

ZEISS

Spectrometer modules

+

Electronic components for spectrometer modules

+

Interface module

+

Driver / software
software development

At ZEISS, the complete solution is consistently aligned with the customer's application. Not only is the corresponding module family available for every measuring job, but the electronics, interface and processing software are always optimally configured. Furthermore, this approach ensures that the customer enjoys a consistently high level of performance and quality for all system components.

Specific system solution

the technical data

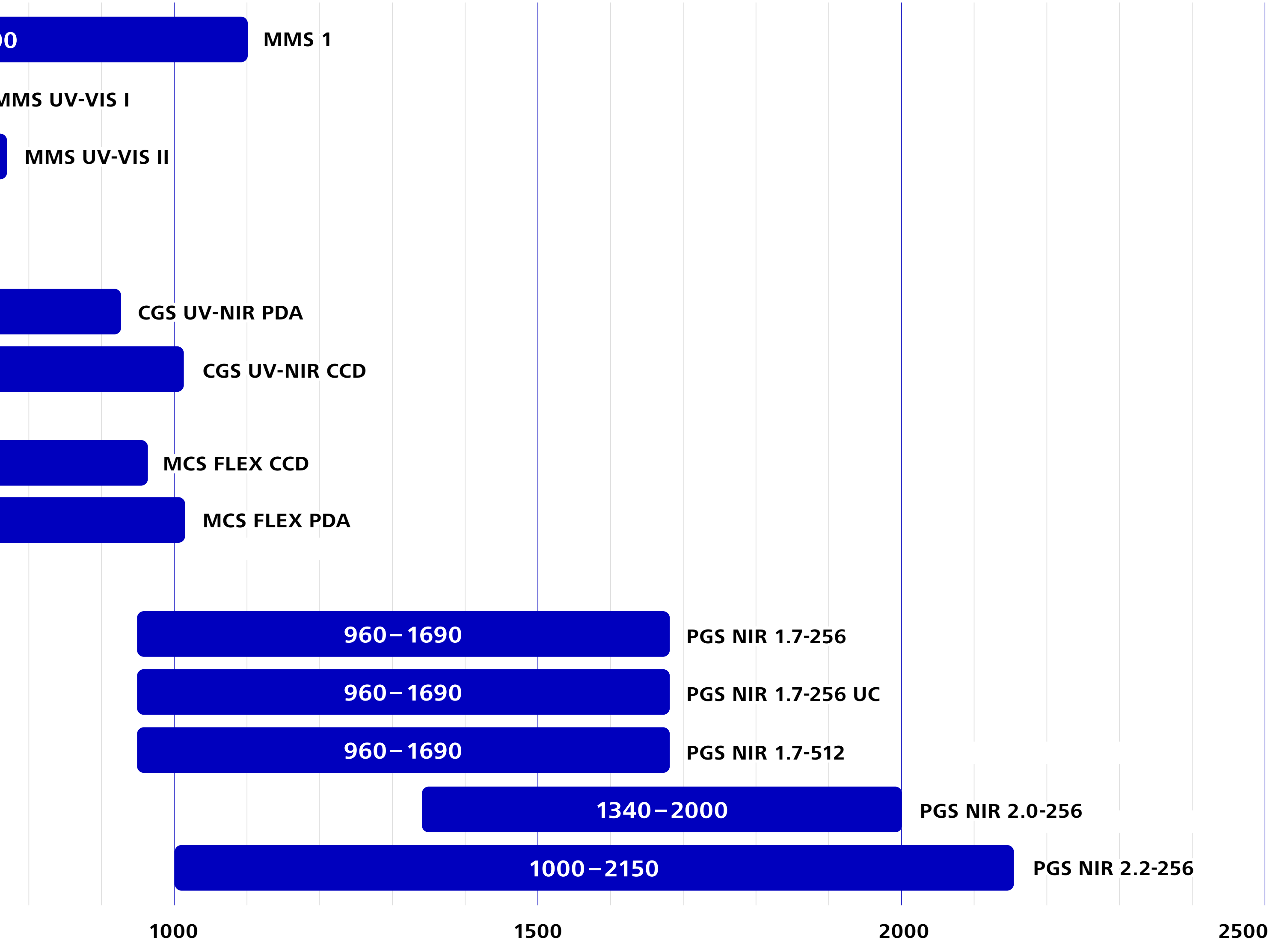

MMS Family

Monolithically compact

The extremely compact design is significant for the spectrometers in the MMS family. Small sizes are available because high repeatability – rather than a high resolving power – is necessary for many applications.

Optical components in the MMS family

- Imaging grating
- A fiber cross-section converter as an optical entrance
- Diode array as an opto-electronic output port

These elements are arranged around and attached to a central body. Depending on the version, the central body is designed as either a glass body or a titanium hollow body. The two components important for the interfaces – the cross-section converter and the detector – are retained.

Central body
On the MMS 1, the central body is a glass body resembling a lens. The imaging grating is replicated directly on this glass body so that it cannot be moved and and is optimally protected against dust and gases. An optically denser medium also enables the use of smaller gratings because of the larger aperture, reducing aberrations.

On the UV-sensitive modules, the large glass body has been replaced by a hollow body for reasons of transmission. The grating and detector are affixed to this hollow body. The overall stability is not impaired by the tube design; the temperature-dependent drift of the wavelength has even been reduced.

Gratings
The gratings for the MMS family are holographically blazed flat-field gratings for optimized effectiveness. At ZEISS, these grates are manufactured using the threshold value method and achieve significantly higher effectiveness (for unpolarized light) than sinusoidal gratings. In addition to the dispersive function, the grating must image the entrance slit on the detector array. Via the groove density and curved grooves, comma errors are corrected and the focal curve is evened out (flat field) so that it is optimally adjusted for the flat detector structure. Spectra of over 6 mm long are achieved – even with the small focal length available. Thus the same grating design can be used for the VIS- and the UV-VIS versions. The original grating has an efficiency maximum of approx. 220 nm. The efficiency curve is offset by the factor of the refractive index on the VIS module due to the greater optical thickness.

Cross-section converter
A fiber bundle cross-section converter further optimizes the light intensity. The linear arrangement of individual fibers creates the entrance slit (slit height h determined by the number of individual fibers; the slit width w determined by the core diameter). This is adjusted to the pixel size of the diode array used and to the dispersion properties of the flat-field grating, enabling light intensities to reach the theoretical limit. The cross-section converter is an integral part of the spectrometer design and therefore cannot simply be changed. There is, however, the possibility of changing the length of the fiber and the design of the entrance. It must also be noted that quartz fibers, such as those used on older MMS UV modules (VIS), create so-called solarization centers when irradiated with deep UV light under 220 nm. This means: the transmission of the fibers is reduced when irradiated with high-energy light. This effect occurs more strongly and more often the shorter the wavelength (higher photon energy), the shorter the intensity and the longer the brightness time. The transmission can also be limited above 220 nm up to 250 nm. This solarization effect can only be partially reversed but can be corrected via frequent reference measurements. For measurements below 225 nm, it is possible to equip the MMS module with solarization-stable fibers. Using a WG 225 filter with 3 mm thickness is an absolute must with standard modules.

Detector

MMS
In the MMS family, the silicon diode array S3904-256Q from Hamamatsu is integrated. Only the MMS 1 NIR enhanced uses the Hamamatsu type S8381-256Q. By using a shorter special housing, the split-off angle is very small, enabling an efficient grating design. This and the 6 mm spectrum length must be considered when switching to another detector. The diode array is coated directly with a dielectric edge filter to suppress the second order.

The following modules are available:

Module	Spectral range (nm)
MMS 1	310 – 1100
MMS UV-VIS	190 – 720 or 250 – 780
MMS UV	195 – 390

MMS UV-VIS I / UV-VIS II

Technical Data

Optical entrance		Fiber bundle consists of 30 quartz glass fibers with a 70 µm core diameter, designed as a cross-section converter
	Input: round	Diameter: 0.5 mm NA = 0.22 (homogeneous illumination of the acceptance angle) Mounted in an SMA connector
	Output: linear	70 µm x 2500 µm (entrance slit)
Grating		Flat-field, 366 l/mm (in the center), blazed for approx. 220 nm
Diode array		Manufacturer: Hamamatsu Type: S 3904-256Q in special housing Number of pixels: 256
Spectral range	**UV-VIS I**	190 nm – 720 nm Specifications for the 220 nm – 720 nm range
	UV-VIS II	250 nm – 780 nm Specifications for the 250 nm – 780 nm range
Wavelength accuracy		0.5 nm
Temperature drift		≤ 0.006 nm/K
Spectral pixel distance		$\Delta\lambda_{\text{Pixel}} \approx 2.2$ nm
Resolution		$\Delta\lambda_{\text{FWHM}} \approx 7$ nm
Sensitivity		≈ 10^3 Vs/J
Stray light		≤ 0.3 % with deuterium lamp Transmission at 310 nm with $NaNO_2$ solution (50 g/l)
Dimensions	**With housing** **Cross-section converter (outer length)**	67 x 60 x 40 mm³ Standard: 240 mm, available up to 1 m

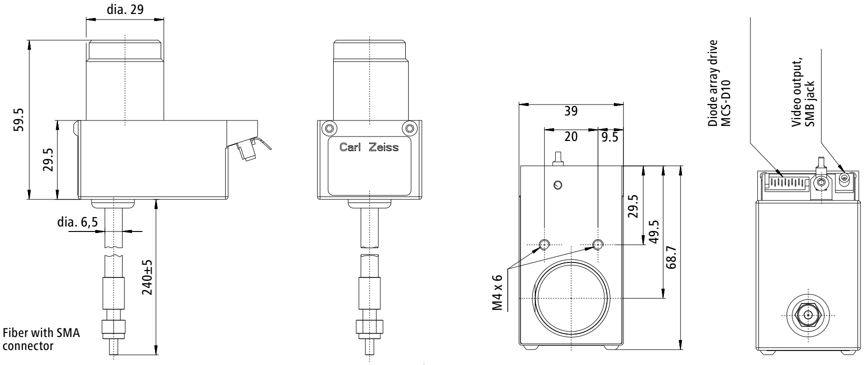

Order number	Name	Wavelength range	Description
224000-9001-000	MMS UV-VIS I	190 – 720 nm	PDA with 256 pixels, 240 mm external fiber length
000000-1410-176	MMS UV-VIS I	190 – 720 nm	PDA with 256 pixels, 240 mm external fiber length, low solarization
000000-1090-197	MMS UV-VIS II	250 – 785 nm	PDA with 256 pixels, 240 mm external fiber length

approx. 15 quartz glass fibers with a
signed as a cross-section converter

s illumination of the acceptance angle)
nector
nce slit)

r), blazed for approx. 220 nm

matsu
4-256N in special housing

with NaJ solution (10 g/l)

able up to 1 m

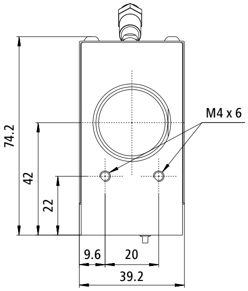

mm external fiber length

mm external fiber length, low solarization

MMS

On-site electronics

Configuration: an overview

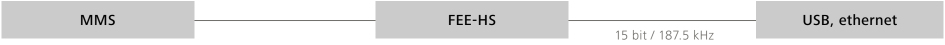
MMS
FEE-HS
USB, ethernet
15 bit / 187.5 kHz

USB / ethernet configuration

USB and ethernet electronics are available for the standard PC interfaces. The USB-based electronics are powered externally through an additional power supply (a self-powered USB device). The PC is connected via a standard USB cable. We recommend a hi-speed USB port (USB 2.0 or 3.0). All electronic circuit boards are designed to be integrated into a customer's housing. The user must provide external ± 12 VDC and + 5 VDC supply voltages.

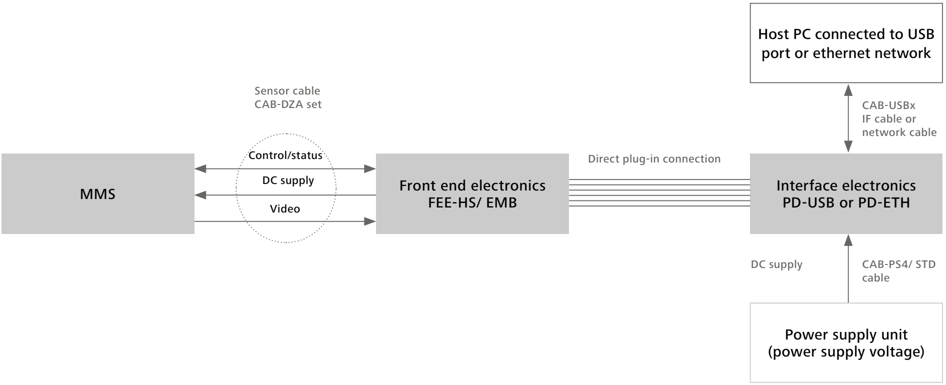
Host PC connected to USB port or ethernet network
Sensor cable
CAB-DZA set
CAB-USBx
IF cable or
network cable
Control/status
DC supply
Video
Direct plug-in connection
MMS
Front end electronics
FEE-HS/ EMB
Interface electronics
PD-USB or PD-ETH
DC supply
CAB-PS4/ STD
cable
Power supply unit
(power supply voltage)

CGS UV-NIR Family

More than you'd think

The CGS UV-NIR spectrometers are a class unto themselves. They are extremely compact and robust and are available with a PDA or CCD detector upon request. These spectrometers enable users to measure with maximum quality and optimal spectral efficiency.

Optical components in the CGS family

- Imaging grating
- Optical entrance
- CCD or PDA as an opto-electronic exit port

The CGS comprises an imaging grating, an optical entrance and an uncooled CCD receiver array or a silicon photodiode array (PDA). The CCD receiver array has an electric shutter function which requires minimal integration times and consequently enables high sensitivity. The PDA requires an extremely low noise, ensuring a high signal-to-noise ratio – even in low lighting conditions. The core of the spectrometers is a blazed flat-field grating for light dispersion and imaging. The overall configuration results in a spectral pixel distance of 0.4 nm / pixel with a CCD detector and 0.7 nm / pixel with the PDA detector. A spectral resolution smaller than 3 nm is achieved in accordance with the Rayleigh criterion. The optical entrance is an optical slit on the module side (available in different widths) and an SMA connector on the customer side. All optical components are mounted in a housing made of aluminum.

The spectrometer modules are compact and thermally stable, making them ideal for industrial applications. Their excellent thermal stability and a very low amount of stray light ensure reliable measuring results – even in rough environments. The CGS spectrometer modules extend the MMS and MCS spectrometer module product families.

The new CGS spectrometer combines the benefits of the MMS and MCS spectrometers:

- High resolution
- High sensitivity
- Very good signal-to-noise ratio
- High dynamic range
- Small size

Areas of application

The areas of application for these spectrometers are diverse because of their flexible design. They can be classified in accordance with measurement principles, areas of application or the materials to be analyzed.
Yet their most important advantage is their compactness and insensitivity to external influences so that the modules can be installed in very close proximity to production. An option for on-line inspection is available for most of the applications mentioned below.

The following modules are available:

Module	Spectral range (nm)
CGS UV-NIR CCD	190 – 1015
CGS UV-NIR PDA	190 – 935

e varied upon request)
s illumination of the acceptance angle)
face recommended for customer

, blazed for approx. 230 nm

terium lamp (absorption A_{10} of NaI)

ck-thinned CCD, 2048 pixels

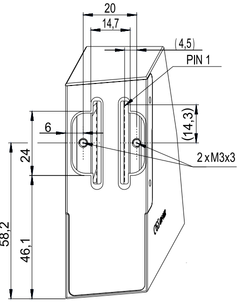
20
14,7
(4,5)
PIN 1
6
(14,3)
2 x M3x3
24
58,2
46,1

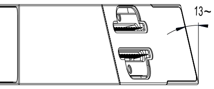

fiber

2048 pixels

CGS UV-NIR PDA

Technical Data

Optical entrance	SMA connector 40 µm optical slit (can be varied upon request) NA = 0.22 (homogeneous illumination of the acceptance angle) 600 µm mono-fiber interface recommended for customer
Grating	Flat field 534 l/mm (in the center), blazed for approx. 230 nm
Spectral range	190 nm – 935 nm
Resolution (FWHM) with 50 µm slit	UV-VIS < 2.0 nm NIR < 2.0 nm
Stray light (ASTM 387-04)	3 AU at 240 nm with deuterium lamp (absorption A_{10} of NaI)
Integration time (dependent on on-site electronics)	min. 500 µs
Sensor	Hamamatsu S3903, 1024 pixels
Housing size L x W x H	78 x 30 x 75 mm^3

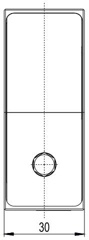

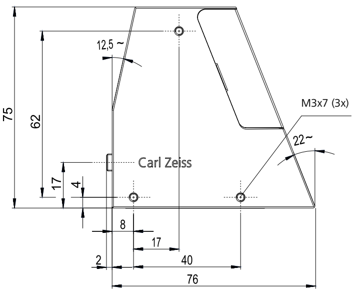
12,5 ~
M3x7 (3x)
22~
Carl Zeiss
75
62
17
4
8
17
2
40
76

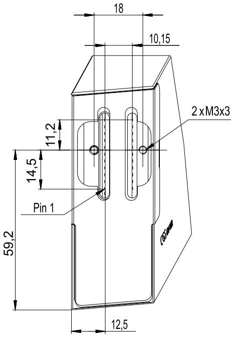
18
10,15
2 x M3x3
11,2
14,5
Pin 1
59,2
12,5

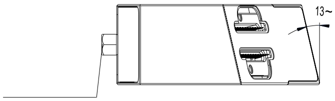

SMA connector, 600 µm fiber

Order number	Name	Wavelength range	Description
000000-2034-897	CGS UV-NIR PDA	190 – 935 nm	Hamamatsu S3903, NMOS linear image sensor, 1024 pixels

CGS UV-NIR PDA

On-site electronics

Configuration: an overview

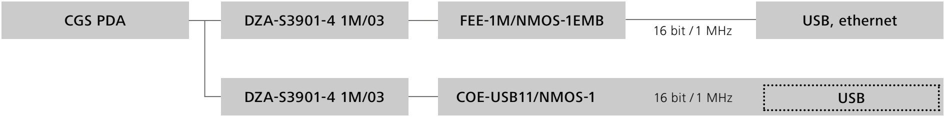
CGS PDA
DZA-S3901-4 1M/03
FEE-1M/NMOS-1EMB
16 bit / 1 MHz
USB, ethernet
DZA-S3901-4 1M/03
COE-USB11/NMOS-1
16 bit / 1 MHz
USB

USB / ethernet configuration

USB and ethernet electronics are available for the standard PC interfaces. The interface electronics (USB and/or ethernet) are powered externally via a power supply unit (self powered). USB-based electronics are connected with the PC via a standard USB cable. A hi-speed USB port (USB 2.0 or 3.0) is required for this configuration.

Ethernet-based configurations are connected to networks via a standard ethernet cable (patch cable) or directly to PCs or laptops via a cross-over ethernet cable. All electronic circuit boards are designed to be integrated into a customer's housing. The user must provide the external + 5 VDC supply voltage.

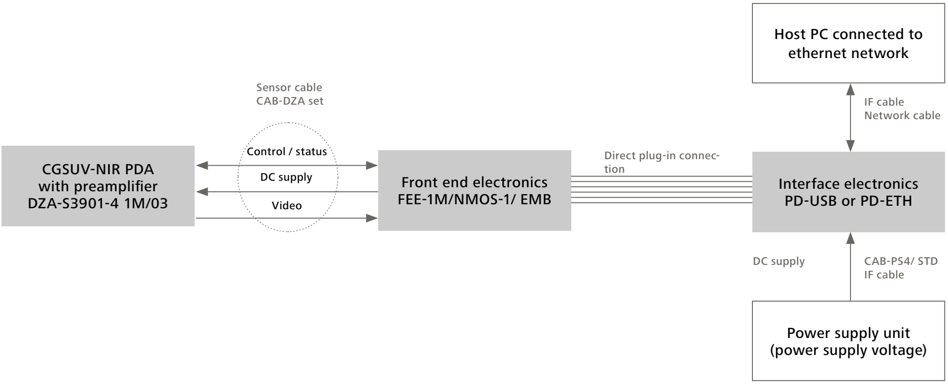
Host PC connected to ethernet network
IF cable
Network cable
Sensor cable
CAB-DZA set
Control / status
DC supply
Video
CGSUV-NIR PDA with preamplifier DZA-S3901-4 1M/03
Front end electronics FEE-1M/NMOS-1/ EMB
Direct plug-in connection
Interface electronics PD-USB or PD-ETH
DC supply
CAB-PS4/ STD IF cable
Power supply unit (power supply voltage)

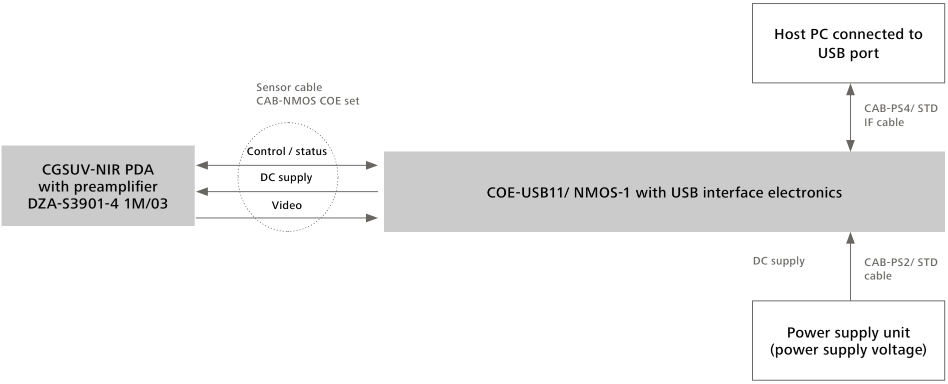
Host PC connected to USB port
CAB-PS4/ STD IF cable
Sensor cable
CAB-NMOS COE set
Control / status
DC supply
Video
CGSUV-NIR PDA with preamplifier DZA-S3901-4 1M/03
COE-USB11/ NMOS-1 with USB interface electronics
DC supply
CAB-PS2/ STD cable
Power supply unit (power supply voltage)

CGS UV-NIR CCD

On-site electronics

Configuration: an overview

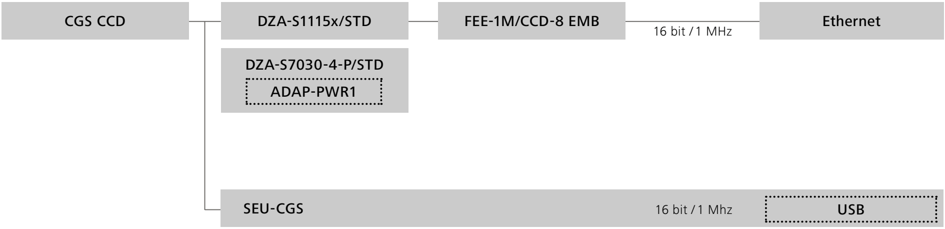
CGS CCD
DZA-S1115x/STD
FEE-1M/CCD-8 EMB
16 bit / 1 MHz
Ethernet
DZA-S7030-4-P/STD
ADAP-PWR1
SEU-CGS
16 bit / 1 Mhz
USB

USB / ethernet configuration

USB and ethernet electronics are available for the standard PC interfaces. The interface electronics (USB and/or ethernet) are powered externally via a power supply unit (self powered). USB-based electronics are connected with the PC via a standard USB cable. A hi-speed USB port (USB 2.0 or 3.0) is required for this configuration.

Ethernet-based configurations are connected to networks via a standard ethernet cable (patch cable) or directly to PCs or laptops via a cross-over ethernet cable. All electronic circuit boards are designed to be integrated into a customer's housing. The user must provide the external + 5 VDC supply voltage.

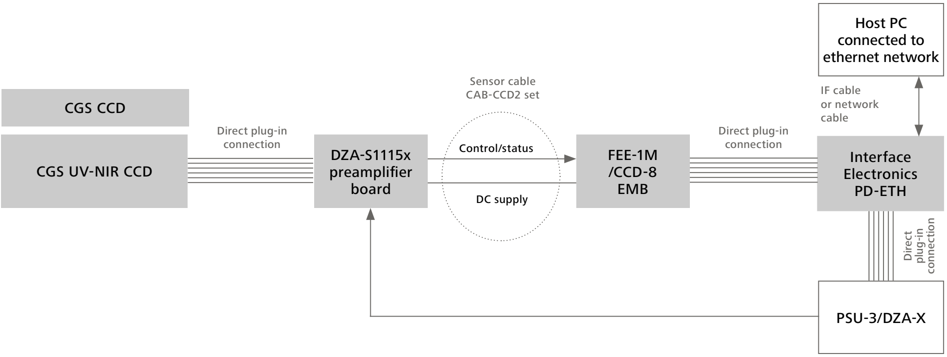
Host PC connected to ethernet network
CGS CCD
Sensor cable CAB-CCD2 set
IF cable or network cable
Direct plug-in connection
Control/status
Direct plug-in connection
CGS UV-NIR CCD
DZA-S1115x preamplifier board
FEE-1M /CCD-8 EMB
Interface Electronics PD-ETH
DC supply
Direct plug-in connection
PSU-3/DZA-X

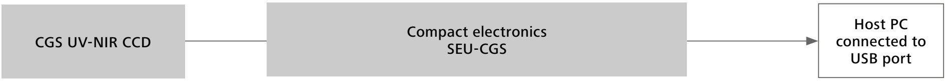
CGS UV-NIR CCD
Compact electronics SEU-CGS
Host PC connected to USB port

MCS FLEX Family

Unstoppable

The spectrometers in the MCS FLEX family feature a good resolving power in addition to their high repeatability. All optical components are firmly affixed via a central body, ensuring a robust design.

Optical components in the MCS FLEX family

- Imaging, aberration-corrected grating
- Fiber cross-section converter or slit as an optical entrance
- Diode array and/or a cooled back-thinned CCD as the optoelectronic exit port

In the MCS FLEX family, the different design of the central body determines the system's application. The cross-section converter and detector are used in all the different versions.

Central body
The central body of the MCS FLEX spectrometers consists of a special aluminum alloy to ensure thermal stability (expansion coefficient a ~ 13 E - 6). The aberration-corrected grating, the cross-section converter (or the mechanical slit) as an optical port and the detector are connected via the central body, ensuring excellent stability and reliability. The hollow body means the MCS FLEX can be used for the complete spectrum of the UV-NIR.

Gratings
The gratings for the MCS FLEX family are also holographically blazed flat-field gratings for optimized effectiveness. Maximum grating efficiency has been optimized for different wavelength ranges through additional ion beam etching. Even spectra over a length of 25 nm are achieved through the aberration correction of the gratings. The grating surface is dimensioned in such a way that light from the fiber can be imaged with NA = 0.22.

Cross-section converter
A fiber bundle cross-section converter further optimizes the light intensity. The linear arrangement of individual fibers forms the entrance slit (slit height h is determined by the number of individual fibers; the slit width w is determined by the core diameter). The slit is adjusted to the pixel size of the diode array used and to the imaging dispersion properties of the flat-field grating, enabling light intensities to reach the theoretical limit. The cross-section converter is an integral part of the spectrometer design and therefore cannot simply be altered. There is, however, the possibility of changing the length of the fiber and the entrance design. Please note that quartz fibers, such as those used on older MCS FLEX UV modules (VIS), create so-called solarization centers when irradiated with deep UV light under 220 nm. This means that the transmission of the fibers is reduced when irradiated with high-energy light. This effect is stronger and occurs more often, the shorter the wavelength (higher photon energy), the greater the intensity and the longer the exposure time. The transmission can also be limited above 220 nm up to 250 nm. This solarization effect can only be partially reversed but can be corrected via frequent reference measurements. For measurements below 225 nm, it is possible to equip the MCS FLEX modules with solarization stabilized fibers. Using a WG 225 filter with 3 mm thickness is an absolute must with standard modules.

Detector

MCS FLEX PDA
The MCS FLEX PDA modules use the silicon diode array S3904-1024Q installed by Hamamatsu. The diode array is coated directly with dielectric edge filters to suppress the 2nd order.

Module	Spectral range (nm)
MCS FLEX PDA	190 – 1015

MCS FLEX CCD
Back-thinned CCDs S7031-1006Q from Hamamatsu are installed on the MCS FLEX CCD modules. Back-thinned CCDs are distinguished by direct sensitivity to UV light. To reduce the dark current, this detector has an integrated Peltier element which must be controlled externally. On the MCS FLEX CCD, the warmth discharged by the Peltier element reaches the fan-cooled heat sink via a copper block.

Module	Spectral range (nm)
MCS FLEX CCD	190 – 980

umination of the acceptance angle)
nector

, blazed for approx. 250 nm

matsu
4-1024Q

deuterium lamp
solution, 50 g/l, 1cm)

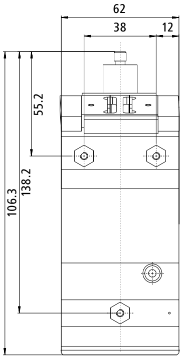
62
38
12
55.2
138.2
106.3

MCS FLEX CCD

Technical Data

Optical entrance	Cross-section converter
Cross-section converter	Diameter: 0.5 mm NA = 0.22 (consistent illumination of the acceptance angle) Mounted in an SMA connector
Grating	Flat field 248 l/mm (in the center), blazed for approx. 250 nm
Diode array	Manufacturer: Hamamatsu Type: S 7031-1006 Number of pixels: 1044 x 64
Spectral range	190 – 980 nm
Wavelength accuracy	0.5 nm
Temperature drift	≤ 0.009 nm/K
Spectral pixel distance	$\Delta\lambda_{\text{Pixel}} \approx 0.8$ nm
Resolution	$\Delta\lambda_{\text{FWHM}} \approx 3-4$ nm (UV-NIR version)
Stray light	≤ 0.1 % at 340 nm with deuterium lamp (Transmission of $NaNO_2$ solution, 50 g/l, 1cm)
Housing size L x W x H	198 x 68 x 122 mm (long cross-section converter) 160,3 x 68 x 122 mm (short cross-section converter)

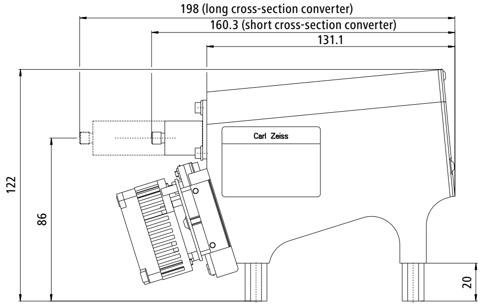
198 (long cross-section converter)
160.3 (short cross-section converter)
131.1
Carl Zeiss
122
86
20

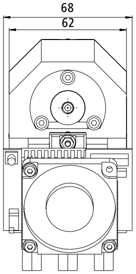

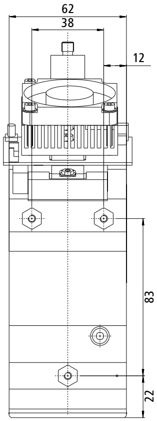
62
38
12
83
22

Order number	Name	Wavelength range	Description
000000-1423-352	MCS FLEX CCD UV-NIR	190 – 980 nm	With Hamamatsu CCD detector S7031 with 1024 (1044) x 64 pixels, short cross-section converter
000000-1761-535	MCS FLEX CCD UV-NIR	190 – 980 nm	With Hamamatsu CCD detector S7031 with 1024 (1044) x 64 pixels, long cross-section converter

MCS FLEX PDA

On-site electronics

Configuration: an overview

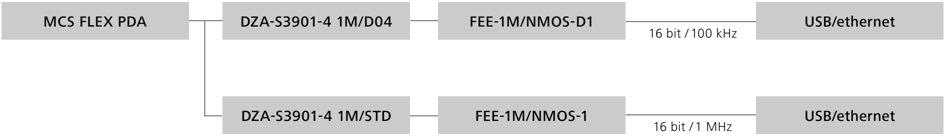
MCS FLEX PDA
DZA-S3901-4 1M/D04
FEE-1M/NMOS-D1
16 bit / 100 kHz
USB/ethernet
DZA-S3901-4 1M/STD
FEE-1M/NMOS-1
16 bit / 1 MHz
USB/ethernet

USB / ethernet configuration

USB and ethernet electronics are available for the standard PC interfaces. The USB-based electronics are powered externally through an additional power supply (a self-powered USB device). The PC is connected via a standard USB cable. We recommend a hi-speed USB 2.0 port (compatible with a standard USB 1.1).

High-speed USB communication is required to use the fast FEE-1M. All electronic circuit boards designed to be integrated into a customer's housing. The user must provide the external + 5 VDC supply voltage.

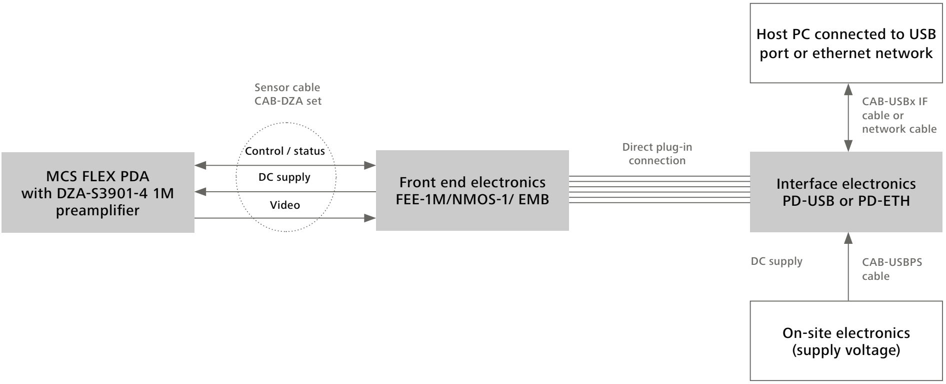
Host PC connected to USB port or ethernet network
CAB-USBx IF cable or network cable
Sensor cable CAB-DZA set
Control / status
DC supply
Video
Direct plug-in connection
MCS FLEX PDA with DZA-S3901-4 1M preamplifier
Front end electronics FEE-1M/NMOS-1/ EMB
Interface electronics PD-USB or PD-ETH
DC supply
CAB-USBPS cable
On-site electronics (supply voltage)

MCS FLEX CCD

On-site electronics

Configuration: an overview

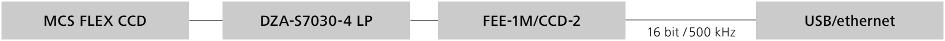
MCS FLEX CCD
DZA-S7030-4 LP
FEE-1M/CCD-2
16 bit / 500 kHz
USB/ethernet

USB / ethernet configuration

USB and ethernet electronics are available for the standard PC interfaces. The USB-based electronics are powered externally through an additional power supply (a self-powered USB device). The PC is connected via a standard USB cable. We recommend a hi-speed USB 2.0 port (compatible with a standard USB 1.1). All electronic circuit boards designed to be integrated into a customer's housing. The user must provide the external + 5 VDC supply voltage.

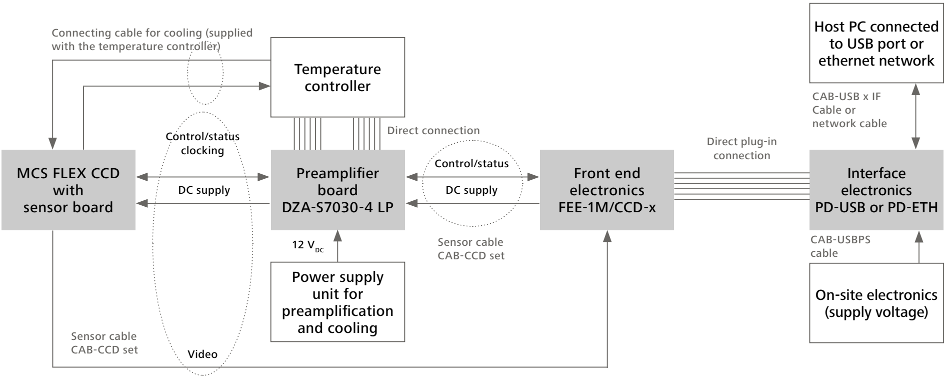
Connecting cable for cooling (supplied with the temperature controller)
Temperature controller
Host PC connected to USB port or ethernet network
CAB-USB x IF Cable or network cable
Control/status clocking
Direct connection
Direct plug-in connection
MCS FLEX CCD with sensor board
DC supply
Preamplifier board DZA-S7030-4 LP
Control/status
DC supply
Front end electronics FEE-1M/CCD-x
Interface electronics PD-USB or PD-ETH
12 V_DC
Sensor cable CAB-CCD set
CAB-USBPS cable
Power supply unit for preamplification and cooling
On-site electronics (supply voltage)
Sensor cable CAB-CCD set
Video

PGS Family

The NIR specialists

The spectrometers in the PGS family are designed to be used in NIR. InGaAs (indium gallium arsenide) is used as a detector material in this wavelength range. The special combination of an aspheric collimator lens and a focusing lens enables the use of optimized plane gratings for NIR while retaining good flat field correction of the spectral imaging. To ensure long-term stability, all optical components are firmly affixed to each other.

Optical components in the PGS family

- Blazed plane grating
- Aspheric lenses
- Mono-fiber with a slit as an optical entrance
- Cooled InGaAs photodiode array as an optoelectronic output

Central body
In the PGS family, a special aluminum alloy (expansion coefficienta ~ 13E - 6) is used for the central body. This body is the carrier for the blazed grating and the aspheric collimator and focusing lens. The input fiber and the detector are firmly affixed to the central body, guaranteeing excellent stability.

Gratings
The gratings used in the PGS family are mechanically ruled or holographically exposed. The maximum of the efficiency is modified to the special wavelength range in NIR. With the free diameter, the grating surface is dimensioned in such a way that the light from a fiber can be imaged with a NA of up to 0.37.
Input fiber
The light is generally coupled via a mono quartz fiber. These fibers have a diameter of 600 µm and a NA = 0.22. There is a slit at the end of the fiber with a height of 500 µm (NIR 1.7) and/or 250 µm (NIR 2.2). The slit heights are adjusted to the pixel heights in the InGaAs arrays. A cross-section conversion of the light for creating a higher entrance slit, such as on modules with silicon detectors, is not necessary because of the lower detector height of the InGaAs arrays.

Detector
InGaAs detectors are used in the near infrared range. For the PGS NIR modules, arrays with InGaAs are used for the range up to 1.7 µm and modules with extended InGaAs are used for the range up to 2.2 µm. Arrays are also available with an element number of 256 or 512 (only 1.7 µm) pixels. For the extended InGaAs arrays, an order-sorting filter is applied to the array, depending on the wavelength range, to suppress the 2nd diffraction order.

The following modules are available:

Module	**Spectral range (nm)**
PGS NIR 1.7-256 UC	960 – 1690
PGS NIR 1.7-256	960 – 1690
PGS NIR 1.7-512	960 – 1690
PGS NIR 2.0-256	1340 – 2000
PGS NIR 2.2-256	1000 – 2150

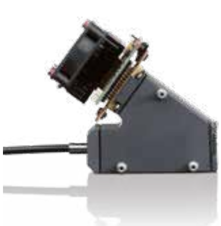

PGS NIR 1.7-256

Technical Data

Optical entrance	**Input: round** **Output: linear**	Fiber consists of Infrasil quartz glass Diameter: 0.6 mm Length 300 mm NA = 0.22 (consistent illumination of the acceptance angle), mounted in an SMA connector Slit width: 80 µm
Filter		950 nm edge filter
Grating		Plane grating, 484 l/mm, blazed for approx. 1.2 µm
Diode array		Manufacturer: Hamamatsu Type: S 9203-256 Number of pixels: 256
Spectral range		960 – 1690 nm
Wavelength accuracy		± 1 nm
Temperature drift (10 – 40°C)		< 0.012 nm/K
Spectral pixel distance		$\Delta\lambda_{\text{Pixel}} \approx 3$ nm
Resolution		$\Delta\lambda_{\text{FWHM}} \approx 8$ nm
Stray light		≤ 0.1 % as transmission of 10 mm of water at 1405 nm (measured using a halogen lamp)
Weight		approx. 590 g
Operating temperature		0 – 40°C (standard, depending on cooling electronics)
Storage temperature		-40 – +70°C
Minimal bending radius of fiber (for storage and transport)		50 mm
Minimal bending radius in operation (for wavelength accuracy)		100 mm

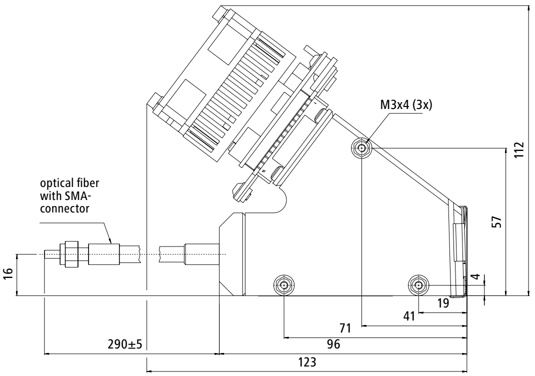
M3x4 (3x)
optical fiber with SMA-connector
112
57
4
16
19
41
71
96
290±5
123

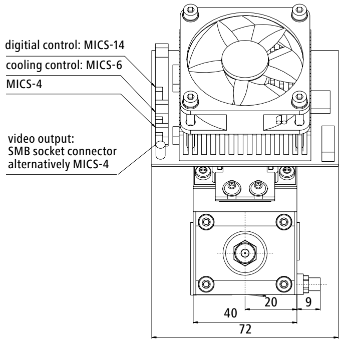
digitial control: MICS-14
cooling control: MICS-6
MICS-4
video output: SMB socket connector alternatively MICS-4
20
9
40
72

Order number	Name	Wavelength range	Description
000000-1381-397	PGS NIR 1.7 t1-256	960 – 1690 nm	NIR spectral sensor, Peltier cooled, InGaAs PDA up to 1.7 µm 256 pixels, dispersion: 3.0 nm/pixel, external fiber length: 300 mm

uartz glass

s illumination of the acceptance angle)
nector

prox. 1.4 μm

matsu
06

of 10 mm of water
sing a halogen lamp)

ending on cooling electronics)

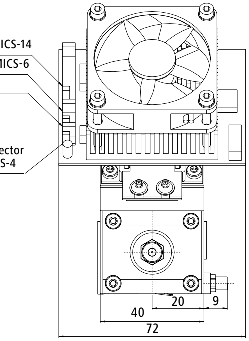
ICS-14
ICS-6
ector
S-4
20
9
40
72

cooled
o 2.2 μm
nm/pixel, external fiber length: 300 mm

PGS NIR 2.2-256

Technical Data

Optical entrance		Fiber consists of Infrasil quartz glass Diameter: 0.6 mm
	Input: round	Length 300 mm NA = 0.22 (consistent illumination of the acceptance angle), mounted in an SMA connector
	Output: linear	Slit width: 80 μm
Filter		950 nm edge filter
Filter for 2nd order on detector		Yes
Grating		Plane grating, 300 l/mm, blazed for approx. 1.4 μm
Diode array		Manufacturer: Hamamatsu Type: G 9206 Number of pixels: 256
Spectral range		1000 – 2150 nm
Wavelength accuracy		± 1 nm
Temperature drift (10–40°C)		< 0.012 nm/K
Spectral pixel distance		$\Delta\lambda_{\text{Pixel}} \approx 5$ nm
Resolution		$\Delta\lambda_{\text{FWHM}} \approx 16$ nm
Stray light		≤ 0.1 % as transmission of 10 mm of water at 1405 nm (measured using a halogen lamp)
Weight		approx. 590 g
Operating temperature		0 – 40°C (standard, depending on cooling electronics)
Storage temperature		-40 – +70°C
Minimal bending radius of fiber (for storage and transport)		50 mm
Minimal bending radius in operation (for wavelength accuracy)		100 mm

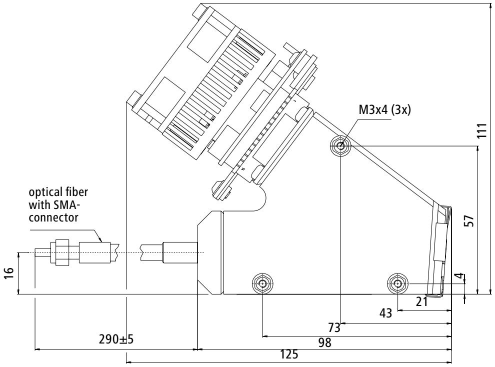
M3x4 (3x)
111
57
4
optical fiber with SMA-connector
16
21
43
73
98
125
290±5

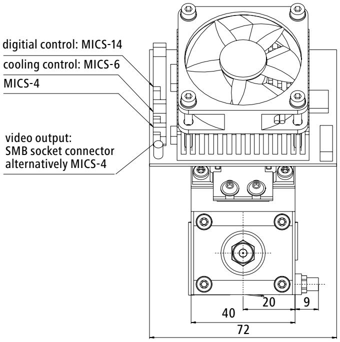
digitial control: MICS-14
cooling control: MICS-6
MICS-4
video output:
SMB socket connector
alternatively MICS-4
20
9
40
72

Order number	Name	Wavelength range	Description
000000-1332-256	PGS NIR 2.2 t2	1000 – 2150 nm	NIR spectral sensor, Peltier cooled Extended InGaAs PDA up to 2.2 μm (256 pixels, dispersion: 5 nm/pixel, external fiber length: 300 mm)

core diameter ≥ 600 µm,

prox. 1.2 µm

matsu
1-01SPL

of 10 mm of water
sing a halogen lamp)

ending on cooling electronics)

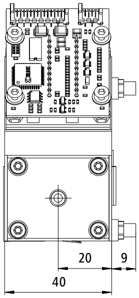

led
o 1.7 µm
m/pixel, external fiber length: 300 mm

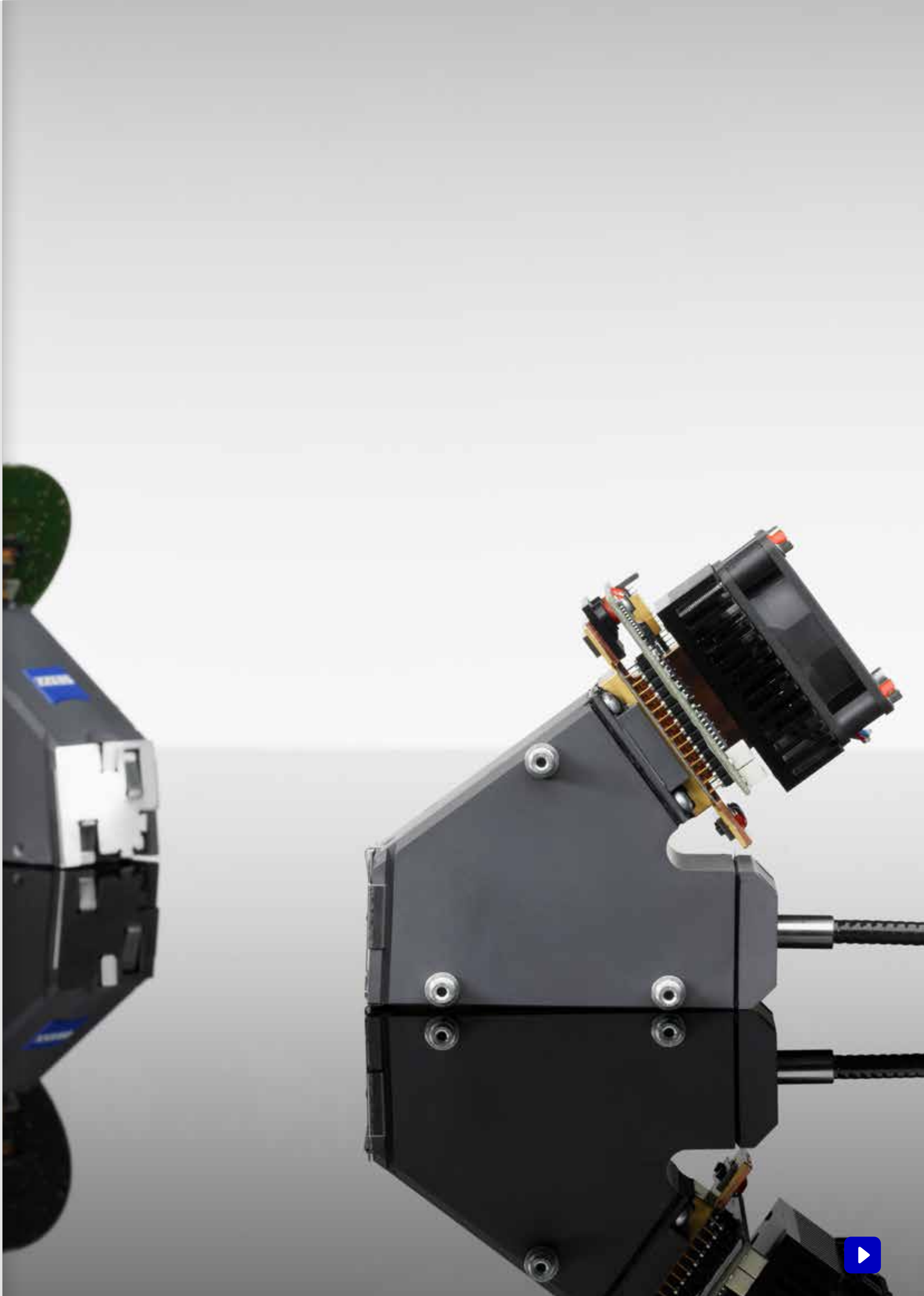

PGS
On-site electronics

Configuration: an overview

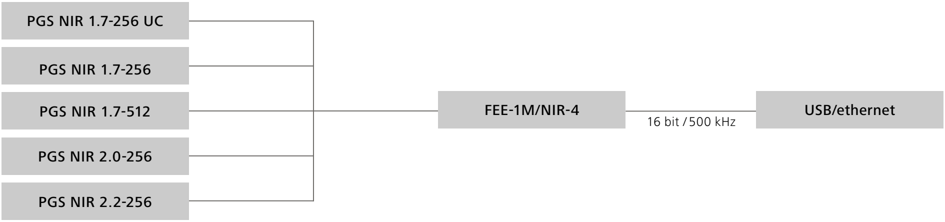
PGS NIR 1.7-256 UC
PGS NIR 1.7-256
PGS NIR 1.7-512
PGS NIR 2.0-256
PGS NIR 2.2-256
FEE-1M/NIR-4
16 bit / 500 kHz
USB/ethernet

USB / ethernet configuration

USB and ethernet electronics are available for the standard PC interfaces. The USB-based electronics are powered externally through an additional power supply (a self-powered USB device). The PC is connected via a standard USB cable. We recommend a hi-speed USB 2.0 port (compatible with a standard USB 1.1). The fast FEE-1M requires high-speed USB communication. All electronic circuit boards designed to be integrated into a customer's housing.

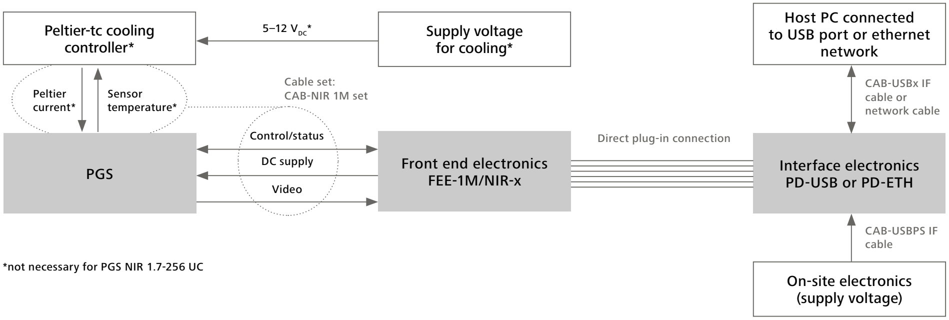
Peltier-tc cooling controller*
5–12 V_DC*
Supply voltage for cooling*
Host PC connected to USB port or ethernet network
Peltier current*
Sensor temperature*
Cable set: CAB-NIR 1M set
CAB-USBx IF cable or network cable
Control/status
DC supply
Video
PGS
Front end electronics FEE-1M/NIR-x
Direct plug-in connection
Interface electronics PD-USB or PD-ETH
CAB-USBPS IF cable
On-site electronics (supply voltage)

*not necessary for PGS NIR 1.7-256 UC

Delphi, and a LabVIEW™ driver for EW™ environment. It is possible to enu structures for data capture by nction library for data capture, configu- meters.

on library directly addresses these es a hardware-independent collection e configuration of the on-site electron- ture.

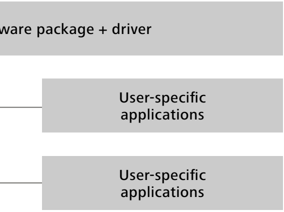

ware package + driver

User-specific applications

User-specific applications

Modular software package for spectral analysis

Aspect Plus

General

Aspect Plus is the complex and flexible modular spectral analytical software for MS Windows with special options available as add-ons. Spectral measurements with the spectrometers from ZEISS can be performed and evaluated using Aspect Plus. Comprehensive functions – from the measurement all the way to the formated printout – simplify analytical evaluation.

Benefits

- Available in multiple languages (English, French, German, Italian, Portuguese, Spanish), other languages to follow
- More than one spectrometer can be controlled simultaneously
- Supports calibrations (chemometric models) created using standard chemometric software such as GRAMS, UNSCRAMBLER® or UCAL
- Filter function eliminating outlying spectra
- Communication via OPC for integration into production line inspection
- Use of pre-defined products or creation of user-specific products, as required
- Calculation, evaluation and integration into an upstream process environment
- Control of results via Digital I/O

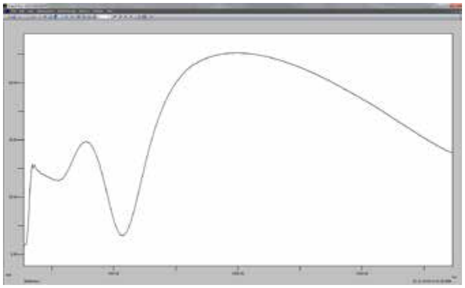

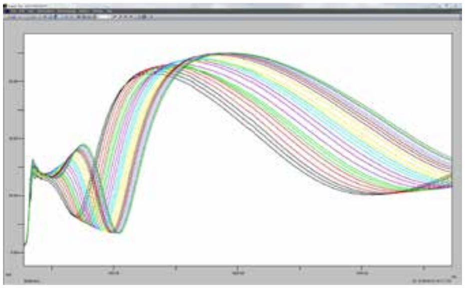

Order number	Name	Description
263259-5020-026	Aspect Plus	Windows spectrometer software
000000-1242-401	Aspect Plus driver for PCs and USBs	Aspect Plus driver for Windows 2000 and XP tec5 electronics

y is very high for the size of the module, pixel resolution procedure, an exact elength from light sources which emit on). The spectrometer modules are not issions which contain many spectrally

om rough surfaces) provides informa- surface. In addition to the spectrometer, placement (angle to surface normal) of mportant. In most cases, a light source on is used, e.g. a halogen lamp. In this nt to bring the cross-section conversion face to be measured without an addi-

s on diverse surfaces (materials)

quality

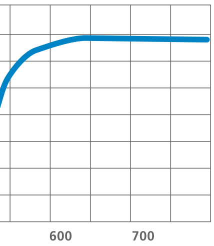

les have been specially developed for ogy. Their high repeatability and light spectral resolution meet the specifica-

se of diffuse reflection and refers to the ht from 'smooth' low-scatter surfaces. uired in addition to the sensor. Please depends strongly on the α angle. A ements under 0°C is possible by using a both supplies the light and transmits it

Examples

- Coatings in general
- Anti-reflective coatings of surfaces using metals or dielectric coatings
- Ellipsometry
- Determining the fat content in meat and sausages
- Determining the moisture content in humidity in grains, food and cellulose
- Identifying plastics for recycling and disposal

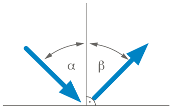

$\alpha = \beta$

Requirements

Many reflection spectra do not exhibit particularly clear structures. Thus absolute wavelength accuracy is often significantly more important than a good spectral resolving power.

White light interference

Interferences are the result of radiating white light on optically transparent interfaces because, for certain wavelengths, the optical path difference is exactly the multiple of the optical layer thicknesses n x d (λ_1, λ_2: position of the extrema; distance: one period). If the refractive index n is known, then the geometric layer thickness d can be determined. The fiber interface ensures easy coupling to microscopes or flanging onto coating systems. Inversely: if layer thickness d is known, then the dispersion n (λ) can be determined.

Example

- Performing layer thickness measurement on photo resists and dielectric layers

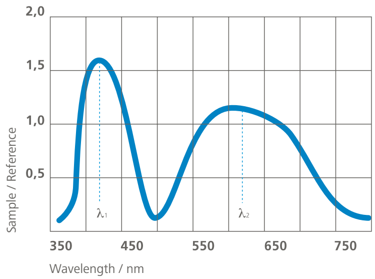

E.g. MMS 1, n = 1.5
d_{max}, ≈ 25 µm, d_{min}, ≤ 0.2 µm

$2\ n \times d = \lambda_1 \times \lambda_2 / (\lambda_1 - \lambda_2)$

Requirements

High absolute accuracy of the wavelength is also necessary to accurately determine the thickness. The maximum measurable thickness is coupled with the spectral resolving power (split of two interference maxima), the minimal thickness with the spectral range to be captured (display of at least a half-period). Absolute intensity values must be known to determine even thinner layers (performing an evaluation of less than a half-period).

Transmission

Radiographing material with the thickness d provides information on the spectral dependence of the absorption constant α(λ) (I_0: radiated intensity, I(d): transmitted intensity). Immersion probes connected to a light source and a spectrometer module via fibers are the simplest way to measure the concentration c of liquids. The concentration is related to the absorption constant via the extinction coefficient ε . Otherwise, setting up a collimated beam path is recommended. However, it is also possible to work with the cross-section converter entrance in direct contact with the object to be measured.

Examples

- Measuring filters (color filters, interference filters)
- Determining the concentration of liquids
- Determining the sugar and alcohol content in beverages
- Performing quality assurance in the petrochemical industry

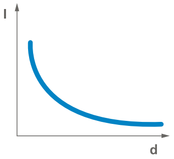

Lambert-Beer law
$I = I_0 \times e^{-ś \times d}$
$\alpha = \varepsilon \times c$

Requirements

In many cases, a very high spectral resolution is once again less important than very good wavelength accuracy and high dynamic resolution, such as that offered by the MMS modules.

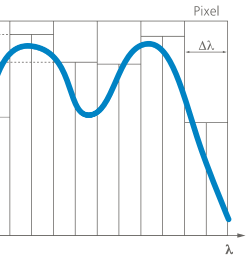

e spectral position λ – with a certain ividual line, a spectrometer with at ength accuracy $\Delta\lambda_{\pm}$ is required. This he position accuracy of the readout ele- ctor) and/or the stability of this position d by the repeatability. In contrast, the uracy only depends indirectly on the erties of the spectrometer and is not a onal sense. The stability (or repeatability) ends on the mechanical stability and ined wavelength drift. The former is r spectrometer modules and the drift is

xel (= $\Delta\lambda_{pixel}$) has nothing to do with ad, it is just the linear dispersion of a r. Pixel dispersion and spectral resolu- dth of the entrance slit and the imaging e slit is imaged on approx. 3 pixels, corresponds approximately to $\Delta\lambda_{Rayleigh}$.

de array spectrometers (DAS)

position of the pixels and/or the wave- ht, the resolution is different than on ometers with movable elements. Reso- plitting two adjacent lines" – depends f these lines with respect to the pixels:

nes are imaged onto the pixels in such a alls onto the middle pixel (I_2) he two neighboring pixels (I_1, I_3), the splayed intensity is $I_2 < 0.81 \times I_1$ (I_3). Δλ $\Delta\lambda_{pixel}$).

The position of the maxima corresponds relatively exactly to the central wavelengths of the pixels displayed.

If, however, the maximum of a line is imaged onto the dividing line of two pixels (I_1,I_2), then four pixels are required to establish a clear reduction in pixel intensities. Both pixels exhibit roughly the same intensity so that a reduction to 81% is only displayed in the next pixel (I_3). In this case, the real maxima are separated by less than three pixels. However, the DAS displays a spectral distance of 3 x $\Delta\lambda_{pixel}$ because a diode array only captures discrete values with the step size of the pixel dispersion.
A total of four pixels are required for the evaluation.

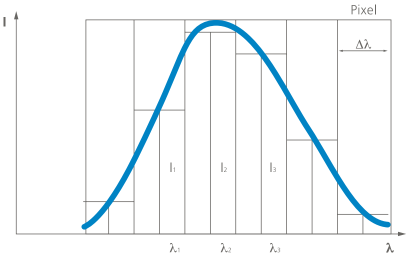

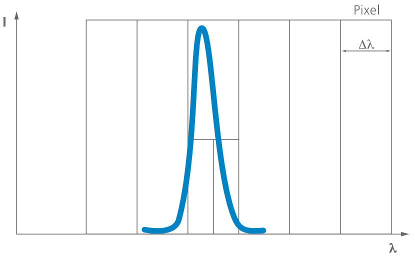

Sub-pixel resolution
Determining the peak wavelength λ_{max} (and/or peak intensity I_m) requires that the spectral line to be measured be imaged onto at least three pixels. With three intensity value pairs per pixel $I_{1,2,3}$ and the central wavelength of the corresponding pixels $\lambda_{1,2,3}$, the line can be e.g. relatively easily modified using a parabola. The parabola equation provides the vertex with the information on the peak wavelength and peak intensity. The accuracy of this method depends primarily on the absolute accuracy of the central wavelength. In principle, this wavelength can be determined with almost any degree of accuracy on a diode array spectrometer. If necessary, each pixel can be individually calibrated. However, stability is crucial. Otherwise, the wavelength specification will only remain valid until the next shock or temperature change. No extreme value determination can be performed if the imaging (and the dispersion) of a DAS is selected in such a way that fewer than three pixels are illuminated. This results in a paradox: a seemingly more advantageous situation – a line is very narrow at the exit – leads to significantly greater inaccuracy. If, for example, a line is imaged into only one pixel, the spectral uncertainty is $\Delta\lambda_{pixel}$.

Parabola equation
$I(\lambda) = a \times \lambda^2 + b \times \lambda + c$

Coefficients
a $= (I_3 + I_1 - 2 I_2) / 2 \Delta\lambda^2$
b $= (I_3 - I_1) / 2 \Delta\lambda - 2a \times \lambda^2$
c $= I_2 - a \times I_2^2 - b \times I_2$

Maximum at $\lambda_{max} = -b / 2a$

Determining the half-value width
The parabola fit also provides qualitative information on the half-value width. To perform a parabola fit, $I_{max}/2$ just needs to be inserted into the parabola equation. The half-value width of a parabola only deviates slightly from the half-value width of a Gaussian fit.

The half-value width displayed by a DAS depends on the relative position of a line to the individual pixels and is a periodic function of this position with a 1 pixel period length. Our specifications are based on 'worst-case' values.

More suitable – but also more complex – are fits with Gaussian and Lorentz curves which better correspond to the real spectral distributions. These also have the benefit that the resulting calculated half-value width is not dependent on the relative position to the pixels.

$$\Delta\lambda_{FWHM} = 2[(b/2a)^2 - (c - I_{max})/a]^{1/2}$$

Intensity resolution

The following properties are of interest for measuring intensities:

Relative:
- Smallest detectable change
- Signal stability
- Detection range or dynamics
- Linearity

Absolute:
- Lowest detectable light quantity or sensitivity

y range is consequently smaller than

change of temperature T does not
sitivity. In the range up to 1100 nm, the
as the temperature rises. At tempera-
50 °C, the sensitivity changes by less
1 to 1.55 µm, even for InGaAs photo-
e of the specified range is a stronger
used by a different coating. (Falling
ced sensitivity on the band edge.)

sed do not show any deterioration in
Only the dark current I_{dark} increases
resulting in a reduction of the dynamic
ors – in particular InGaAs diode arrays
this in mind, it should be noted that the
asured are also subject to fluctuations.
nination source is often the limiting

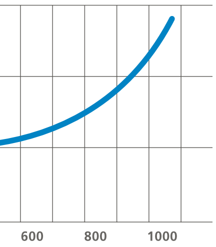

change' is a relative specification. It
cult to specify the smallest detectable
r: how many photons are needed so
onics detect a change? The difficul-
ng the light intensity of a light source
cy. These are also dependent on the
e all components have wavelength-
luding the coupling; second because
ensitivity measurements are of crucial
t case is a light source with a very nar-
with most lasers. The situation is at
dth is significantly smaller than the spec-
e MMS value of over 10^{13} counts/Ws has
d HeNe laser.

Stray light

Specifying the stray light value only makes sense in conjunction with the measuring instructions. Stray light values for the spectrometer modules are determined with three different light sources to determine the different spectral components in stray light and/or false light: a deuterium lamp for the UV range and a halogen lamp for the VIS-NIR range.

The stray light level is the ratio between the respective measurement with a GG495 or KG3 filter and the maximum useful signal. Thus the stray light given is given for the shortwave range, showing that, on the spectrometer modules, the essential stray light proportion comes from the NIR. This is beneficial because these spectrally 'remote' components can be easily filtered out. For the PGS NIR, the stray light value is reduced to 0.1% (measured with a halogen lamp at 1450 nm, RG 850 filter and 10 mm water absorption).

Stray light affects the dynamic range because the full dynamic range is no longer available due to false light.
Changes in the causative radiation only break through in relation to the stray light proportion: e.g. if the stray light proportion is at 1 per mill, a 10% change in the effective radiation means a change of 10^{-4}. If the causative radiation is not used, then the proportion can be further reduced via filtering. In the example described, a blockage of 10^3 leads to a total change of 10^{-7}. There are only small limitations to measuring minuscule changes because the noise is usually much stronger. The stray light proportion can be 'calculated out' if the cause of the signal is known.

Optical interface

Interfaces must be defined mechanically and optically. The SMA plug-in connection – such as that used on all models – is a useful mechanical interface in the optic, resulting in a clear interface along with the well-defined etendue of a fiber bundle.

Etendue
The light etendue G is the product of the light entrance surface F and the opening or spatial angle ς of the light bundel whereby the calculation index n must still be observed. The first factor corresponds to the fiber (bundle) cross-section. The second factor is the result of the numeric aperture (NA).
In the MMS family, the etendue is calculated at G = 0.157 mm²sr.

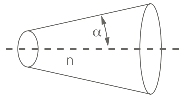

$$G = F \times \varsigma \times n^2$$
$$\varsigma = 2\pi \times (1-\cos\alpha)$$
$$\alpha = \arcsin NA$$

In order to optimally modify an existing light source (fiber, lamp, imaging system), it is recommended that the corresponding etendue be determined first. The following coupling efficiency can be estimated through the comparison with the MMS etendue. A 4% Fresnel reflection loss (index jump at the glass fiber) must be observed.

Transmission increase
Assuming the beam is round, then an increase in transmission of $\eta_{FF,\,QSW} / \eta_{FF,\,Spalt}$ is achieved by using a cross-section converter (CSC) as compared to the classical slit. This can be calculated using the ratio of the light transmitted via the QSW to the light transmitted via a rectangular slit.

With the CSC, the transmitted portion through the fill factor is $\eta_{FF,\,QSW}$. The fill factor is defined as an optically effective surface A_{eff} with respect to the illuminated entire surface A_{apt}. A_{eff} is, in the case of the QSW, the product of the fiber core cross-section with the diameter d_{fiber} and the number of fibers N at the slit, the surface from slit width b and the slit height h. The entire surface is the circular surface with a diameter d_{slit} = h.

$$\eta_{FF,\,CSC} = N \times d_{fiber}{}^2 / d_{apt}{}^2$$
$$\eta_{FF,\,slit} = 4\,b/(p \times d_{slit})$$
$$\eta_{FF,\,CSC} / \eta_{FF,\,slit} = 16 \text{ (MMS)}$$

Diode array spectrometer optimization

In addition to selecting extremely efficient components (a blazed grating, a cross-section converter, a sensitive diode array), the dispersion, imaging properties, entrance slit, pixel size and pixel distances must be well-matched. It is crucial for light sensitivity that – with monochromatic light – more than 2 pixels are illuminated for the spectral resolution. The grating images 1:1 in the first approximation, e.g. the entry slit should be 2 to 3 pixels wide. If more pixels are illuminated, the signal-to-noise ratio and the sensitivity become worse (1 pixel captures a bandwidth that is too narrow). If fewer than 3 pixels are illuminated, the wavelength accuracy becomes worse. That is why e.g. the selection of 70 µm individual fibers for the QSW on the MMS modules are nearly perfect for a pixel width of 25 µm. The number of fibers is the result of the pixel height divided by the external diameter of the individual fibers.

confidence.
r.

om

EN_40_010_0022I | 2020-07

Design, scope of delivery and technical progress subject to change without notice. © Carl Zeiss Spectroscopy GmbH