A PASSION FOR PERFECTION

PFEIFFER VACUUM

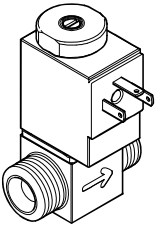

RME 005 A

Control Valve

Operating Instructions

BP 5059 BEN (2011-10)

EN

Product Identification

In all communications with Pfeiffer Vacuum please specify the information on the product nameplate. For convenient reference copy that information into the space provided below:

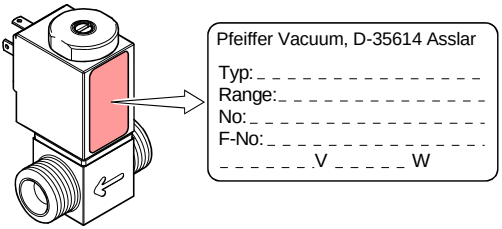

Validity

This document applies to products with part numbers

PF I13 936	(10 sccm)
PF I13 935	(50 sccm)
PF I13 934	(100 sccm)
PF I13 933	(500 sccm)
PF I13 932	(1000 sccm)
PF I13 931	(5000 sccm)

The part number (No) can be taken from the product nameplate.

We reserve the right to make technical changes without prior notice.

All dimensions in mm.

Intended Use

The RME 005 A Control Valve is used in conjunction with the RVC 300 Controller or another control device for controlling gas flows and thus maintaining a desired pressure in a vacuum system.

It must not be used for controlling liquid gases.

Functional Principle

The RME 005 A Control Valve opens and closes as a function of the control voltage.

It will close or remain closed in the event of a power loss.

Example of a control loop:

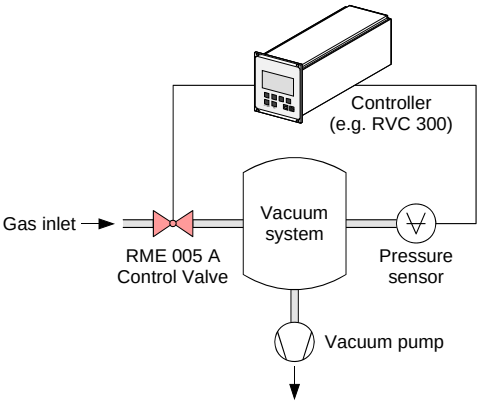

Scope of Delivery

1× Control valve

1× Operating Instructions German

1× Operating Instructions English

1× Safety Guide

Contents

Product Identification 2
Validity 2
Intended Use 2
Functional Principle 3
Scope of Delivery 3

1 Safety 5
1.1 Symbols Used 5
1.2 Personnel Qualifications 5
1.3 General Safety Instructions 6
1.4 Liability and Warranty 6

2 Technical Data 7

3 Installation 10
3.1 Vacuum Connection 10
3.1.1 Flange Connections 11
3.1.2 Tube Connections 13
3.2 Power Connection 17

4 Operation 17

5 Deinstallation 18

6 Maintenance / Repair 22
6.1 Replacing the Filter 22

7 Accessories 25

8 Returning the Product 26

9 Disposal 27

For cross-references within this document, the symbol (→ 🗎 XY) is used.

1 Safety

1.1 Symbols Used

DANGER

Information on preventing any kind of physical injury.

WARNING

Information on preventing extensive equipment and environmental damage.

Caution

Information on correct handling or use. Disregard can lead to malfunctions or minor equipment damage.

1.2 Personnel Qualifications

Skilled personnel

All work described in this document may only be carried out by persons who have suitable technical training and the necessary experience or who have been instructed by the end-user of the product.

1.3 General Safety Instructions

- Adhere to the applicable regulations and take the necessary precautions for the process media used.

  Consider possible reactions between the materials and the process media.
- Adhere to the applicable regulations and take the necessary precautions for all work you are going to do and consider the safety instructions in this document.
- Before beginning to work, find out whether any vacuum components are contaminated. Adhere to the relevant regulations and take the necessary precautions when handling contaminated parts.

Communicate the safety instructions to all other users.

1.4 Liability and Warranty

Pfeiffer Vacuum assumes no liability and the warranty becomes null and void if the end-user or third parties

- disregard the information in this document
- use the product in a non-conforming manner
- make any kind of interventions (modifications, alterations etc.) on the product
- use the product with accessories not listed in the corresponding product documentation.

The end-user assumes the responsibility in conjunction with the process media used.

Failures due to contamination or wear and tear, as well as expendable parts (e.g. seals, filter), are not covered by the warranty.

2 Technical Data

Vacuum connection	M14×1
Adapters (accessories) flange fitting tube fitting	 DN 10 ISO-KF OD ¼", OD 6 mm
Installation angle	any, preferably perpendicular
Pressure range	1×10^{-8} … 2 bar (absolute)
Tightness	1×10^{-9} mbar l/s
Gas flow [1)] PF I13 936 PF I13 935 PF I13 934 PF I13 933 PF I13 932 PF I13 931	 10 sccm F.S. 50 sccm F.S. 100 sccm F.S. 500 sccm F.S. 1000 sccm F.S. 5000 sccm F.S.
Response time	<30 ms
Supply voltage Control range Power Duty cycle	0 … 24 VDC 20 … 70 mA, 1 … 100% F.S. 2.5 W 100%
Degree of protection	IP51
Temperature Ambiance Bakeout	 5 °C … 50 °C 80 °C (with idle coil)
Materials Housing Armature Guiding tube Springs Seals	 stainless steel 1.4301 stainless steel 1.4105 IL stainless steel 1.4305, 1.4105 IL stainless steel 1.4310 FPM
Weight	96 g

1) For air at a pressure difference $\Delta p = 1$ bar

Dimensions [mm]

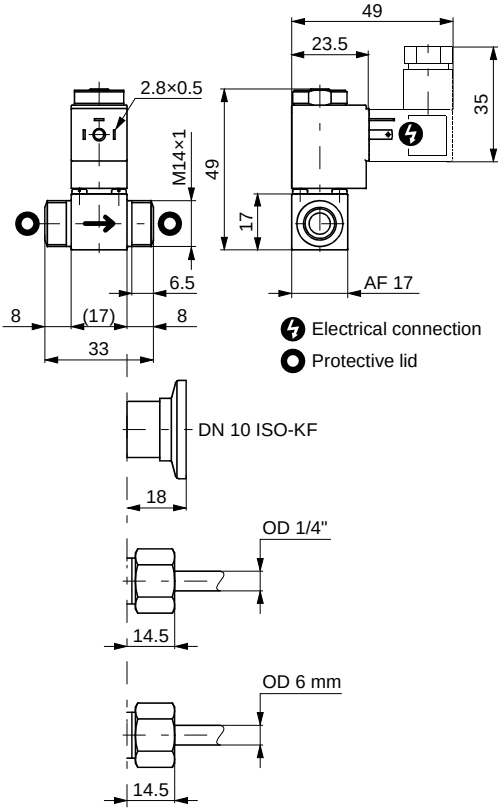

Flow rate curve

Example of a flow rate curve (mean values 500 sccm F.S) at a pressure difference Δp = 1 bar

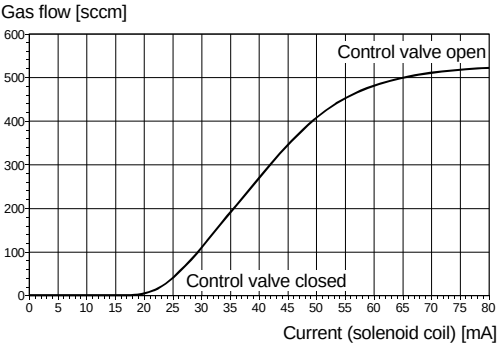

3 Installation

3.1 Vacuum Connection

Caution

Caution: vacuum component

Dirt and damages impair the function of the vacuum component.

When handling vacuum components, take appropriate measures to ensure cleanliness and prevent damages.

Caution

Caution: dirt sensitive area

Touching the product or parts thereof with bare hands increases the desorption rate.

Always wear clean, lint-free gloves and use clean tools when working in this area.

3.1.1 Flange Connections

❶ Remove the protective lids and mount two flange connections (Accessories → 🗎 25).

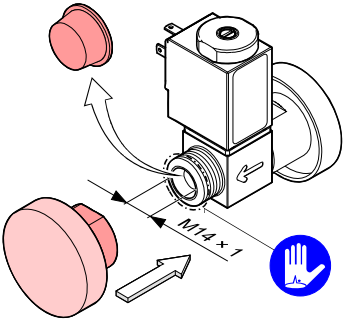

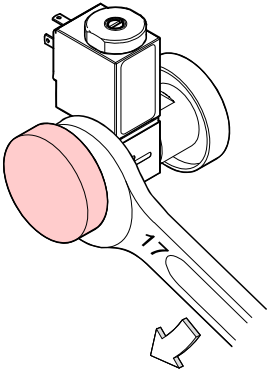

❷ Remove the protective lids and install the product to the vacuum system.

DANGER

DANGER: overpressure in the vacuum system >1 bar

Injury caused by released parts and harm caused by escaping process gases can result if clamps are opened while the vacuum system is pressurized.

Do not open any clamps while the vacuum system is pressurized. Use the type of clamps which are suited to overpressure.

DANGER

DANGER: overpressure in the vacuum system >2.5 bar

KF flange connections with elastomer seals (e.g. O-rings) cannot withstand such pressures. Process media can thus leak and possibly damage your health.

Use O-rings provided with an outer centering ring.

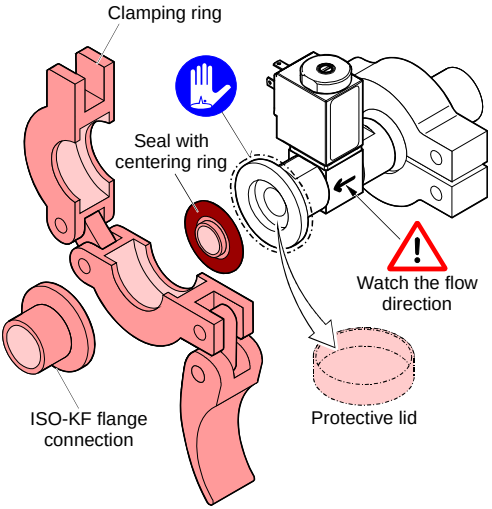


Keep the protective lids.

❸ Check that the vacuum connections are leak tight.

3.1.2 Tube Connections

❶ Cut the tube to the required length and remove the burs.

❷ Slide the union nut and clamping rings over the tube (Accessories → 🗎 25).

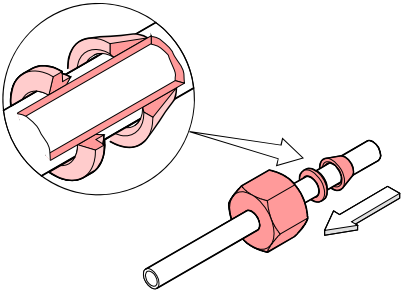

❸ Remove the protective lid and insert the tube until the mechanical stop is reached.

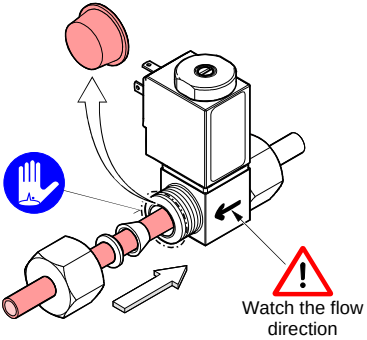

Keep the protective lids.

❹ Slide the clamping rings up to the mechanical stop.

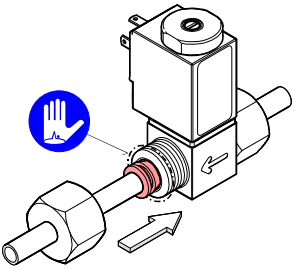

❺ Tighten the union nut with your fingers.

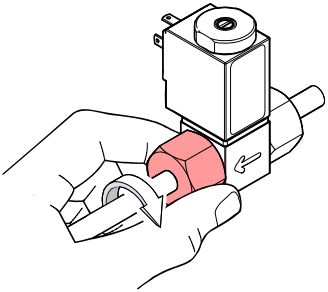

❻ Tighten the union nut

- initial installation by ¾ turns (stainless steel)
- subsequent installation by ¼ turns (stainless steel).

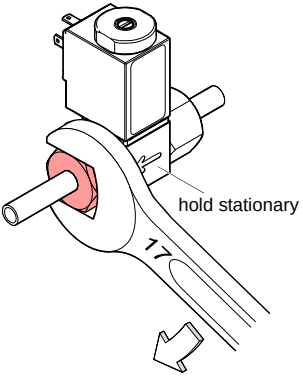

❼ Check that the vacuum connections are leak tight.

3.2 Power Connection

The polarity of the 24 VDC connection need not be taken into consideration.

Before connecting or disconnecting the product, turn off the control system.

Plug in the cable socket and secure it with the screw (Accessories → 25).

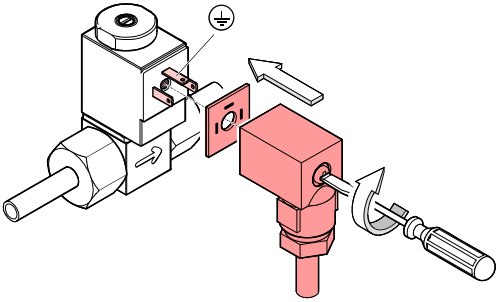

4 Operation

The RME 005 A Control Valve is ready for operation as soon as it has been installed.

It will close or remain closed in the event of a power loss.

5 Deinstallation

Precondition

Vacuum system vented.

DANGER

DANGER: contaminated parts

Contaminated parts can be detrimental to health and environment.

Before beginning to work, find out whether any parts are contaminated. Adhere to the relevant regulations and take the necessary precautions when handling contaminated parts.

Caution

Caution: vacuum component

Dirt and damages impair the function of the vacuum component.

When handling vacuum components, take appropriate measures to ensure cleanliness and prevent damages.

Caution

Caution: dirt sensitive area

Touching the product or parts thereof with bare hands increases the desorption rate.

Always wear clean, lint-free gloves and use clean tools when working in this area.

Before connecting or disconnecting the product, turn off the control system.

Procedure

1. Unfasten the lock screw and unplug the cable socket.

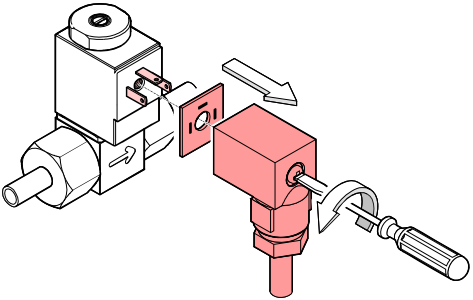

❷ Remove the product from the vacuum system and place the protective lids.

Flange connections

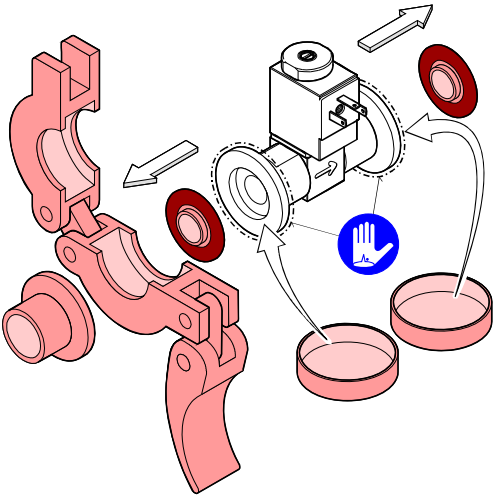

Tube connections

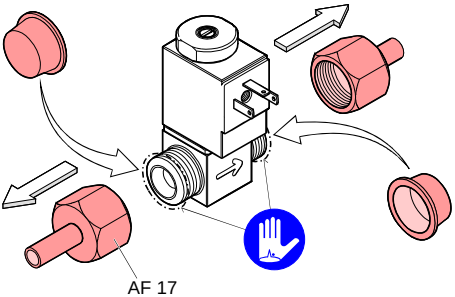

6 Maintenance / Repair

Failures due to contamination or wear and tear, as well as expendable parts (e.g. seals, filter), are not covered by the warranty.

Under clean operating conditions, the product requires no maintenance.

6.1 Replacing the Filter

Precondition

Valve deinstalled (Deinsallation → 🗎 18).

DANGER

DANGER: contaminated parts

Contaminated parts can be detrimental to health and environment.

Before beginning to work, find out whether any parts are contaminated. Adhere to the relevant regulations and take the necessary precautions when handling contaminated parts.

Caution

Caution: vacuum component

Dirt and damages impair the function of the vacuum component.

When handling vacuum components, take appropriate measures to ensure cleanliness and prevent damages.

Caution

Caution: dirt sensitive area

Touching the product or parts thereof with bare hands increases the desorption rate.

Always wear clean, lint-free gloves and use clean tools when working in this area.

Procedure

❶ Remove the filter from the inlet.

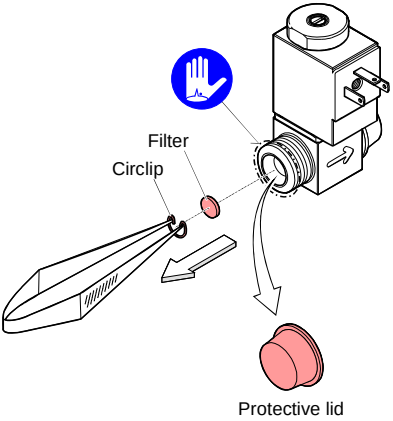

❷ Mount the filter (Accessories → 🗎 25).

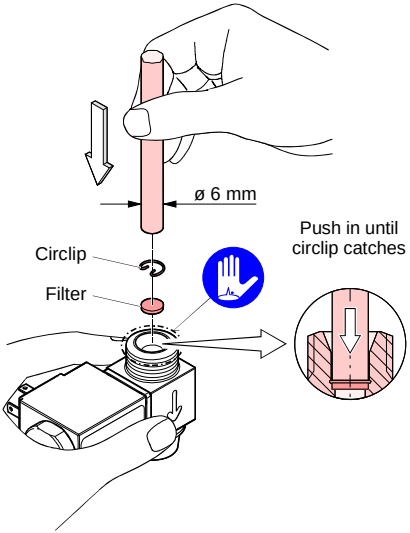

7 Accessories

		Ordering number
Adapter M14×1		
1 flange connection DN 10 KF		PT 420 912-T
1 tube connection OD ¼"	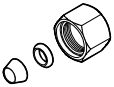	PT 420 913-T
1 tube connection OD 6 mm	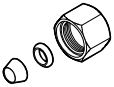	PT 420 914-T
Connection cable for RVC 300 Controller	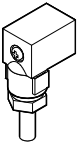 3 m 5 m 10 m 15 m 20 m 25 m	PT 250 003-T PT 250 005-T PT 250 010-T PT 250 015-T PT 250 020-T PT 250 025-T
Filter kit, comprising 10 poral filter ø6×1 10 circlips		PT 131 000-T

8 Returning the Product

WARNING

WARNING: forwarding contaminated products

Contaminated products (e.g. radioactive, toxic, caustic or biological hazard) can be detrimental to health and environment.

Products returned to Pfeiffer Vacuum should preferably be free of harmful substances. Adhere to the forwarding regulations of all involved countries and forwarding companies and enclose a duly completed declaration of contamination *).

*) Form under www.pfeiffer-vacuum.net.

Products that are not clearly declared as "free of harmful substances" are decontaminated at the expense of the customer.

Products not accompanied by a duly completed declaration of contamination are returned to the sender at his own expense.

9 Disposal

DANGER

DANGER: contaminated parts

Contaminated parts can be detrimental to health and environment.

Before beginning to work, find out whether any parts are contaminated. Adhere to the relevant regulations and take the necessary precautions when handling contaminated parts.

WARNING

WARNING: substances detrimental to the environment

Products or parts thereof (mechanical and electric components, operating fluids etc.) can be detrimental to the environment.

Dispose of such substances in accordance with the relevant local regulations.

Separating the components

After disassembling the product, separate its components according to the following criteria:

- Contaminated components

  Contaminated components (radioactive, toxic, caustic, microbiological hazard etc.) must be decontaminated in accordance with the relevant national regulations, separated according to their materials, and disposed of.

- Other components

  Such components must be separated according to their materials and recycled.

A PASSION FOR PERFECTION

PFEIFFER VACUUM

Leading. Dependable. Customer Friendly.

Pfeiffer Vacuum stands for innovative and custom vacuum solutions worldwide. For German engineering art, competent advice and reliable services.

Ever since the invention of the turbopump, we've been setting standards in our industry. And this claim to leadership will continue to drive us in the future.

You are looking for a perfect vacuum solution? Please contact us:

Germany
Pfeiffer Vacuum GmbH
Headquarters
Tel.: +49 (0) 6441 802-0
info@pfeiffer-vacuum.de

Great Britain
Pfeiffer Vacuum Ltd.
Tel.: +44 1908 500600
sales@pfeiffer-vacuum.co.uk

Austria
Pfeiffer Vacuum Austria GmbH
Tel.: +43 1 894 17 04
office@pfeiffer-vacuum.at

Benelux
Pfeiffer Vacuum GmbH
Sales & Service Benelux
Tel.: +800-pfeiffer
benelux@pfeiffer-vacuum.de

India
Pfeiffer Vacuum India Ltd.
Tel.: +91 40 2775 0014
pfeiffer@vsnl.net

Sweden
Pfeiffer Vacuum Scandinavia AB
Tel.: +46 8 590 748 10
sales@pfeiffer-vacuum.se

China
Pfeiffer Vacuum
(Shanghai) Co., Ltd.
Tel.: +86 21 3393 3940
info@pfeiffer-vacuum.cn

Italy
Pfeiffer Vacuum Italia S.p.A.
Tel.: +39 02 93 99 05 1
contact@pfeiffer-vacuum.it

Switzerland
Pfeiffer Vacuum (Schweiz) AG
Tel.: +41 44 444 22 55
info@pfeiffer-vacuum.ch

France
Pfeiffer Vacuum France SAS
Tel.: +33 169 30 92 82
info@pfeiffer-vacuum.fr

Korea
Pfeiffer Vacuum Korea Ltd.
Tel.: +82 31 266 0741
sales@pfeiffer-vacuum.co.kr

United States
Pfeiffer Vacuum Inc.
Tel.: +1 603 578 6500
contact@pfeiffer-vacuum.com

Original: German BP 5059 BDE (2011-10)

bp5059ben

www.pfeiffer-vacuum.net