A PASSION FOR PERFECTION

PFEIFFER VACUUM

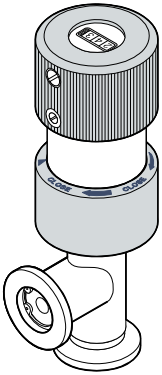

EVN 116

Dosing Valve

Operating Instructions

EN

BP 5005 BEN (2011-11)

Product Identification

In all communications with Pfeiffer Vacuum, please specify the information on the product nameplate. For convenient reference copy that information into the space provided below.

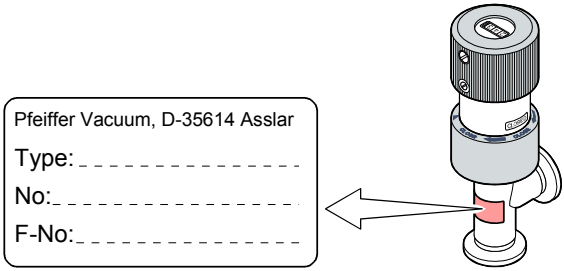

Validity

This document applies to products with part number PF I32 031.

The part number (No) can be taken from the product nameplate.

Intended Use

The manually actuated EVN 116 Dosing valve is used for both, gas dosing and shutting off a defined gas flow without changing the gas flow setting.

The EVN 116 must not be used in connection with liquid gases.

Functional Principle

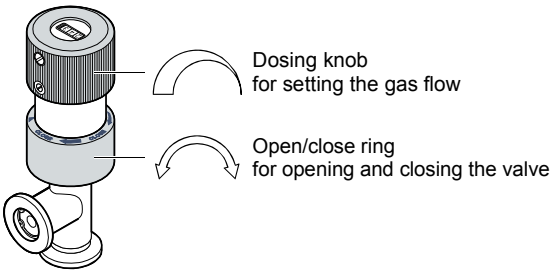

Rotating the dosing knob translates into a linear movement and places the dosing needle reproducibly in the desired position.

Rotating the Open/close ring positions the valve plate.

These movements are independent of each other.

Scope of Delivery

1× valve
1× Operating Instructions German
1× Operating Instructions English
1× Safety Guide

Contents

For cross-references within this document, the symbol (→ 🗎 XY) is used, for cross-references to other documents, the symbol (→ 🕮 [Z]).

1 Safety

1.1 Symbols Used

DANGER

Information on preventing any kind of physical injury.

WARNING

Information on preventing extensive equipment and environmental damage.

Caution

Information on correct handling or use. Disregard can lead to malfunctions or minor equipment damage.

1.2 Personnel Qualifications

Skilled personnel

All work described in this document may only be carried out by persons who have suitable technical training and the necessary experience or who have been instructed by the end-user of the product.

1.3 General Safety Instructions

- Adhere to the applicable regulations and take the necessary precautions for the process media used.
- Adhere to the applicable regulations and take the necessary precautions for all work you are going to do and consider the safety instructions in this document.
- Before beginning to work, find out whether any vacuum components are contaminated. Adhere to the relevant regulations and take the necessary precautions when handling contaminated parts.

Communicate the safety instructions to all other users.

1.4 Liability and Warranty

Pfeiffer Vacuum assumes no liability and the warranty becomes null and void if the end-user or third parties

- disregard the information in this document
- use the product in a non-conforming manner
- make any kind of interventions (modifications, alterations etc.) on the product
- use the product with accessories not listed in the corresponding product documentation.

The end-user assumes the responsibility in conjunction with the process media used.

Failures due to contamination or wear and tear, as well as expendable parts (e.g. seals, filter), are not covered by the warranty.

2 Technical Data

Connection flanges	DN 16 ISO-KF
Mounting orientation	any
Dosing range	5×10^{-6} … 1000 mbar l/s
Tightness	1×10^{-9} mbar l/s
Pressure difference	≤2.5 bar
Operating temperature	≤80 °C
Bakeout temperature	≤150 °C *)
Storage temperature	5 … 40 °C
Dead volume	0.032 cm³
Materials	
Housing, needle, filter	stainless steel
Dosing sleeve	fluor plastomer
Seal	FPM75
Weight	400 g

*) at the flange connections

Dimensions

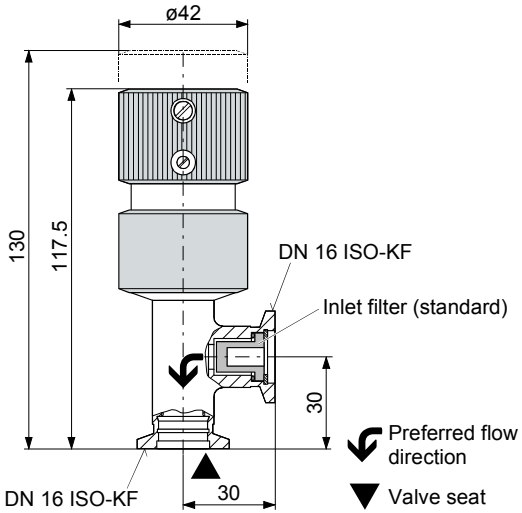

Gas flow with standard filter 1250 mbar l/s

Gas flow without standard filter 3100 mbar l/s

Accessories

Filter

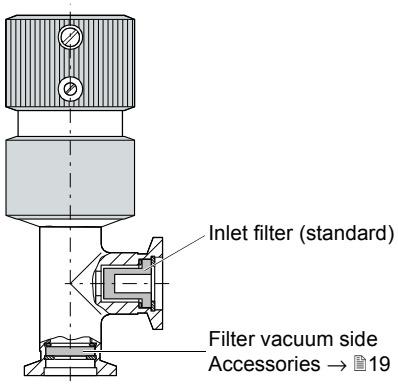

Gas flow 700 mbar l/s

Filter

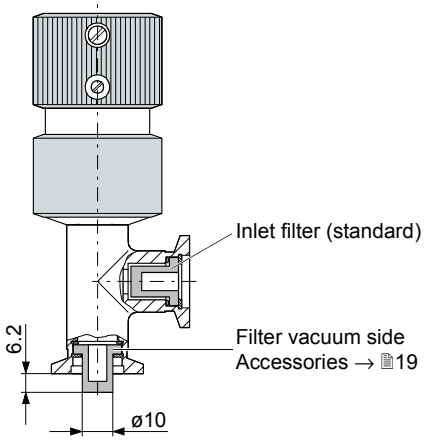

Gas flow 1000 mbar l/s

3 Installation

DANGER

DANGER: overpressure in the vacuum system >1 bar

Injury caused by released parts and harm caused by escaping process gases can result if clamps are opened while the vacuum system is pressurized.

Do not open any clamps while the vacuum system is pressurized. Use the type of clamps which are suited to overpressure.

Caution

Caution: dirt sensitive area

Touching the product or parts thereof with bare hands increases the desorption rate.

Always wear clean, lint-free gloves and use clean tools when working in this area.

Caution

Caution: vacuum component

Dirt and damages impair the function of the vacuum component.

When handling vacuum components, take appropriate measures to ensure cleanliness and prevent damages.

Keep the protective lids.

Flow direction

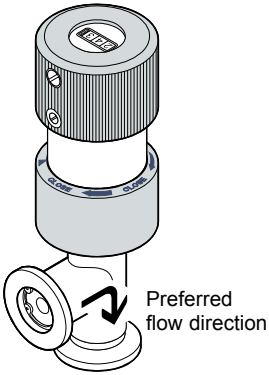

Vacuum connection

Remove the protective lids and connect the valve to the vacuum system using the small flange connections.

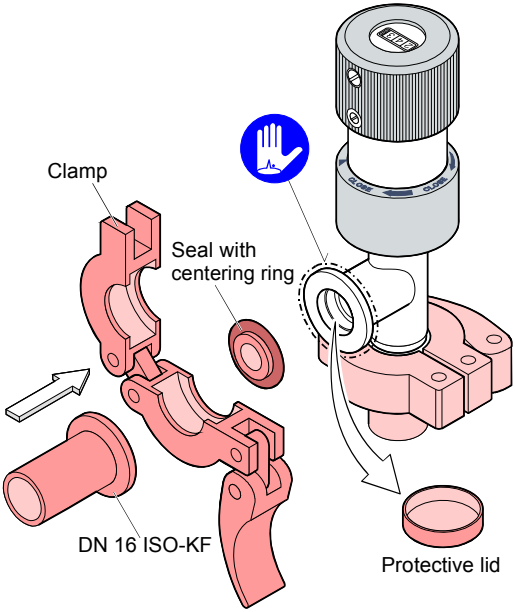

4 Operation

The product is ready for operation as soon as it has been installed.

DANGER

DANGER: hot surface

Touching the hot surface (>55 °C) can cause burns.

Wear protective gloves.

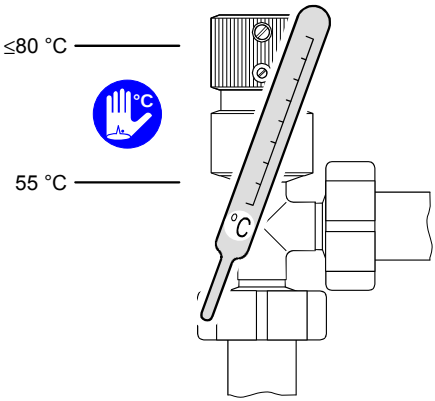

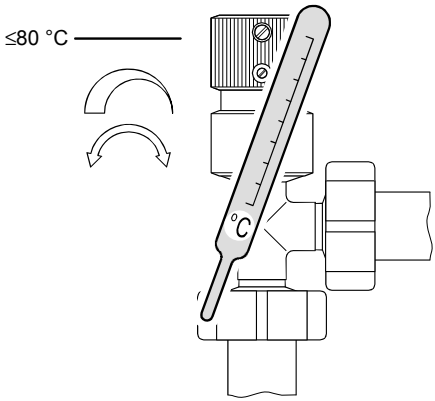

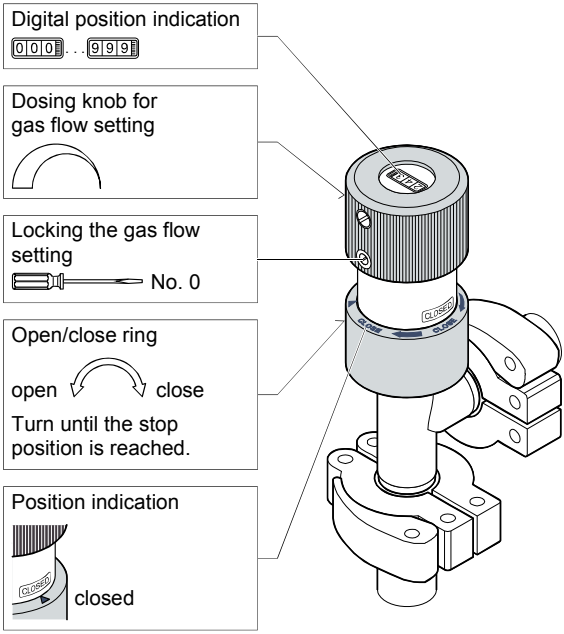

Dead volume

Due to the gas dosing and valve seat seals, there is a dead volume of 0.032 cm^3.

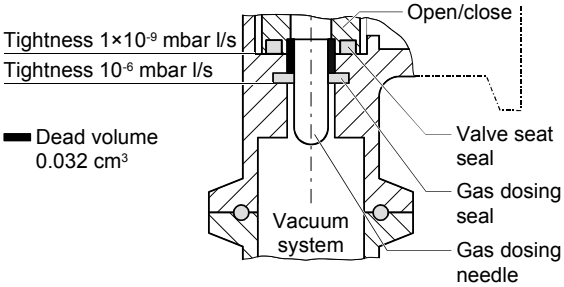

If the pressure in the dead volume is higher than in the vacuum system, the pressure between the dead volume and the vacuum system is compensated. During the compensation phase, one could come to the **false** conclusion that the valve is not tight.

Leak flow rate for pressure compensation = 10^{-6} mbar l/s × pressure difference

5 Gas Flow

5.1 Gas Flow Curve

Using the gas flow curve, the digital indication on the dosing knob and the gas flow can be related to each other.

The gas flow rates in the diagram are mean values.

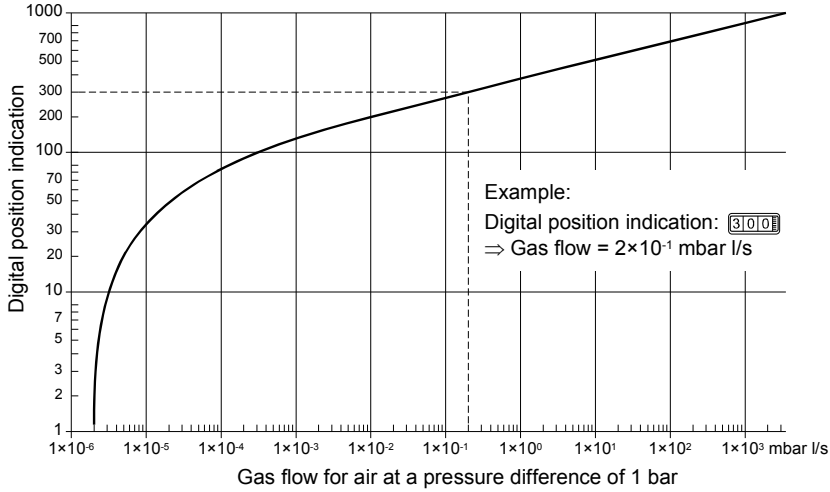

5.2 Conversion Table

Gas flow

	mbar l/s	Torr l/s	sccm	atm cm³ /s
mbar l/s	1	0.75	59.2	0.987
Torr l/s	1.33	1	78.9	1.32
sccm	1.69×10^{-2}	1.27×10^{-2}	1	1.67×10^{-2}
atm cm³ /s	1.01	0.76	59.8	1

6 Deinstallation

DANGER

DANGER: contaminated parts

Contaminated parts can be detrimental to health and environment.

Before beginning to work, find out whether any parts are contaminated. Adhere to the relevant regulations and take the necessary precautions when handling contaminated parts.

Caution

Caution: vacuum component

Dirt and damages impair the function of the vacuum component.

When handling vacuum components, take appropriate measures to ensure cleanliness and prevent damages.

Caution

Caution: dirt sensitive area

Touching the product or parts thereof with bare hands increases the desorption rate.

Always wear clean, lint-free gloves and use clean tools when working in this area.

❶ Vent the vacuum system and let it cool down to <55 °C.

❷ Remove the small flange fittings and put the protective lids in place.

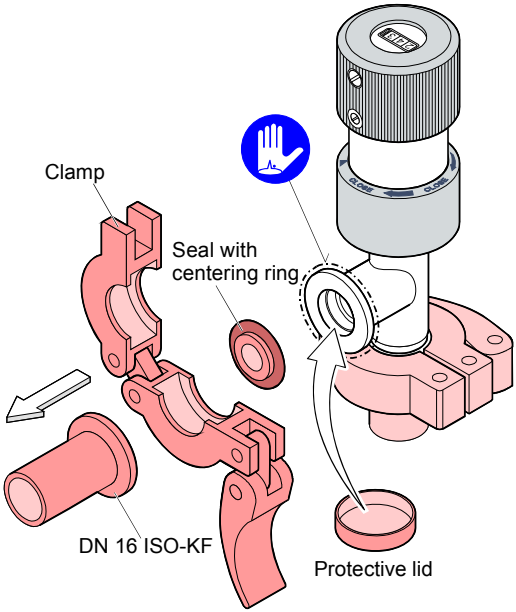

7 Maintenance

Failures due to contamination or wear and tear, as well as expendable parts (e.g. seals, filter), are not covered by the warranty.

Cleaning the filter(s)

❶ Remove the valve from the vacuum system according to section "Deinstallation".

❷ Remove the protective lids.

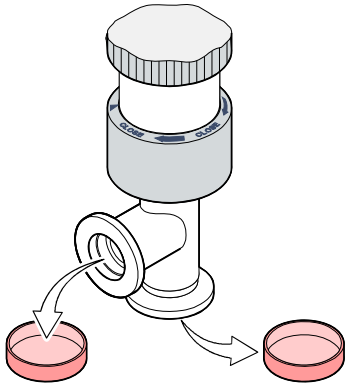

❸ Remove the filter(s).

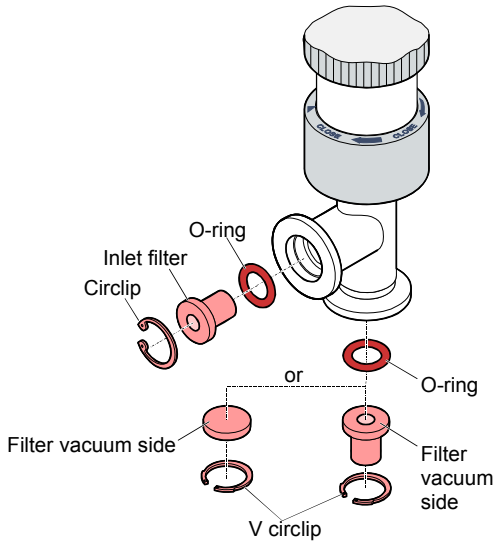

❹ Clean the filter(s) with alcohol.

DANGER

DANGER: cleaning agents

Cleaning agents can be detrimental to health and environment.

Adhere to the relevant regulations and take the necessary precautions when handling cleaning agents and disposing of them. Consider possible reactions with the product materials (→ 🗎 6).

❺ Dry the filter(s) with compressed air.

DANGER

DANGER: compressed air

Unprofessionally handling compressed air can cause physical injuries.

Adhere to the relevant regulations and take the necessary precautions when handling compressed air.

The compressed air must meet the following specifications:

- free of oil
- dry
- free of particles >25 µm

❺ Reinstall the filter and connect the Dosing valve to the vacuum system according to section "Installation".

8 Repair

We recommend returning the product to your local Pfeiffer Vacuum service center for repair.

Pfeiffer Vacuum assumes no liability and the warranty becomes null and void if any repair work is carried out by the end-user or third parties.

9 Accessories

If the dosing needle can be contaminated by the process, installing a filter at the vacuum port of the valve is strongly recommended.

Filter vacuum side
(gas flows 700 mbar l/s)

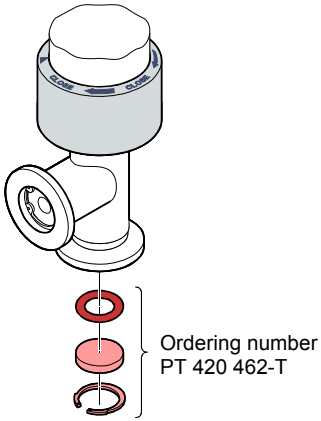

Filter vacuum side
(gas flow 1000 mbar l/s)

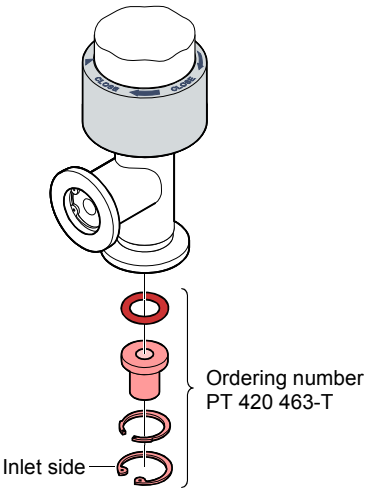

10 Storage

Caution

Caution: vacuum component

Inappropriate storage leads to an increase of the desorption rate and/or may result in mechanical damage of the product.

Cover the vacuum ports of the product with protective lids or grease free aluminum foil. Do not exceed the admissible storage temperature range (→ 🗎 7).

11 Returning the Product

WARNING

WARNING: forwarding contaminated products

Contaminated products (e.g. radioactive, toxic, caustic or biological hazard) can be detrimental to health and environment.

Products returned to Pfeiffer Vacuum should preferably be free of harmful substances. Adhere to the forwarding regulations of all involved countries and forwarding companies and enclose a duly completed declaration of contamination *).

*) Form under www.pfeiffer-vacuum.net

Products that are not clearly declared as "free of harmful substances" are decontaminated at the expense of the customer.

Products not accompanied by a duly completed declaration of contamination are returned to the sender at his own expense.

12 Disposal

DANGER

DANGER: contaminated parts

Contaminated parts can be detrimental to health and environment.

Before beginning to work, find out whether any parts are contaminated. Adhere to the relevant regulations and take the necessary precautions when handling contaminated parts.

WARNING

WARNING: substances detrimental to the environment

Products or parts thereof (mechanical and electric components, operating fluids etc.) can be detrimental to the environment.

Dispose of such substances in accordance with the relevant local regulations.

Separating the components

After disassembling the product, separate its components according to the following criteria:

Contaminated components

Contaminated components (radioactive, toxic, caustic, or biological hazard etc.) must be decontaminated in accordance with the relevant national regulations, separated according to their materials, and disposed of.

Other components

Such components must be separated according to their materials and recycled.

Notes

A PASSION FOR PERFECTION

PFEIFFER VACUUM

Leading. Dependable.
Customer Friendly.

Pfeiffer Vacuum stands for innovative and custom vacuum solutions worldwide. For German engineering art, competent advice and reliable services.

Ever since the invention of the turbopump, we've been setting standards in our industry. And this claim to leadership will continue to drive us in the future.

You are looking for a perfect vacuum solution? Please contact us:

Germany
Pfeiffer Vacuum GmbH
Headquarters
Tel.: +49 (0) 6441 802-0
info@pfeiffer-vacuum.de

Great Britain
Pfeiffer Vacuum Ltd.
Tel.: +44 1908 500600
sales@pfeiffer-vacuum.co.uk

Austria
Pfeiffer Vacuum Austria GmbH
Tel.: +43 1 894 17 04
office@pfeiffer-vacuum.at

Benelux
Pfeiffer Vacuum GmbH
Sales & Service Benelux
Tel.: +800-pfeiffer
benelux@pfeiffer-vacuum.de

India
Pfeiffer Vacuum India Ltd.
Tel.: +91 40 2775 0014
pfeiffer@vsnl.net

Sweden
Pfeiffer Vacuum Scandinavia AB
Tel.: +46 8 590 748 10
sales@pfeiffer-vacuum.se

China
Pfeiffer Vacuum
(Shanghai) Co., Ltd.
Tel.: +86 21 3393 3940
info@pfeiffer-vacuum.cn

Italy
Pfeiffer Vacuum Italia S.p.A.
Tel.: +39 02 93 99 05 1
contact@pfeiffer-vacuum.it

Switzerland
Pfeiffer Vacuum (Schweiz) AG
Tel.: +41 44 444 22 55
info@pfeiffer-vacuum.ch

France
Pfeiffer Vacuum France SAS
Tel.: +33 169 30 92 82
info@pfeiffer-vacuum.fr

Korea
Pfeiffer Vacuum Korea Ltd.
Tel.: +82 31 266 0741
sales@pfeiffer-vacuum.co.kr

United States
Pfeiffer Vacuum Inc.
Tel.: +1 603 578 6500
contact@pfeiffer-vacuum.com

Original: German BP 5005 BDE (2011-11)

bp5005ben

www.pfeiffer-vacuum.net